City of Duvall

Big Rock Park Multipurpose Field

SEPA SET– August 12, 2016

Vicinity Map

NORTH

Project Area

NORTH

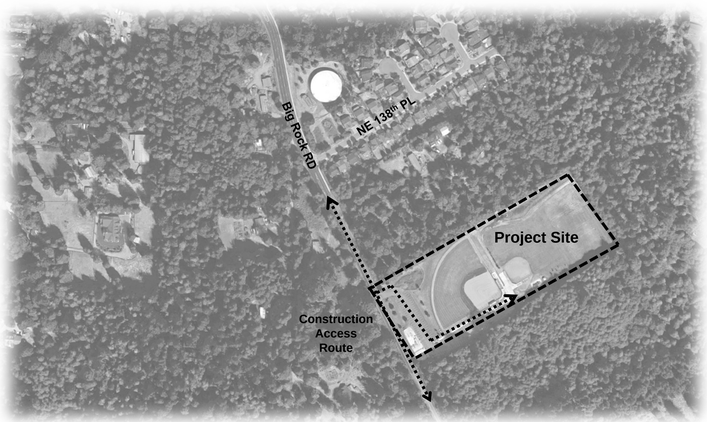

Project Site

NORTH

Owner:

City of Duvall
15535 Main Street NE, PO Box 1300
Duvall, Washington 98019
(425) 788-1185 Phone

City of Duvall
Small Town. Real Life.

Project Engineer:

D.A. Hogan & Associates Inc.
119 1st Avenue South, Suite 110
Seattle, Washington 98104
(206) 285-0400 Phone

DA HOGAN

Civil Engineer

LPD Engineering
911 Western Avenue, Suite 420 –
Seattle, Washington 98104
(206) 725-1211 Phone

LPD engineering pllc

Electrical Engineer

Stantec
4100 194th Street SW, Suite 400 –
Lynnwood, Washington 98036
(206) 224-3667 Phone

Stantec

Index Of Drawings

F-0.0 Cover

F-0.1 Existing Conditions
F-0.2 T.E.S.C. Plan
F-0.3 T.E.S.C. Details
F-0.4 Demolition Plan

F-1.0 Site Overview
F-1.1 Athletic Fields Layout Plan
F-1.1A Parking Lot & Pathway Layout Plan
F-1.2 Athletic Fields Grading Plan
F-1.2A Parking Lot & Pathway Grading Plan
F-1.3 Athletic Fields Drainage Plan
F-1.4 Athletic Fields Washwater Plan
F-1.5 Athletic Fields Fencing & Dimension Plan

F-2.1 Site Sections & Details
F-2.2 Drainage Details
F-2.3 Washwater & Concrete Details
F-2.4 Fencing Details
F-2.5 Fencing & Netting Details
F-2.6 Site Details
F-2.7 Edge Anchor Details

F-3.1 Composite Layout Plan & Detail
F-3.2 Soccer Layout Plan & Details
F-3.3 Lacrosse Layout Plans
F-3.4 Softball Layout Plan & Details

L-1.1 Landscape and Restoration Plan & Details
L-1.2 Detailed Planting Plan

E-1.0 Electrical Site Plan - Demo
E-1.1 Electrical Site Plan
E-1.2 Electrical Site Plan

E-2.1 Electrical Details
E-2.2 One-Line Diagram/Schedules

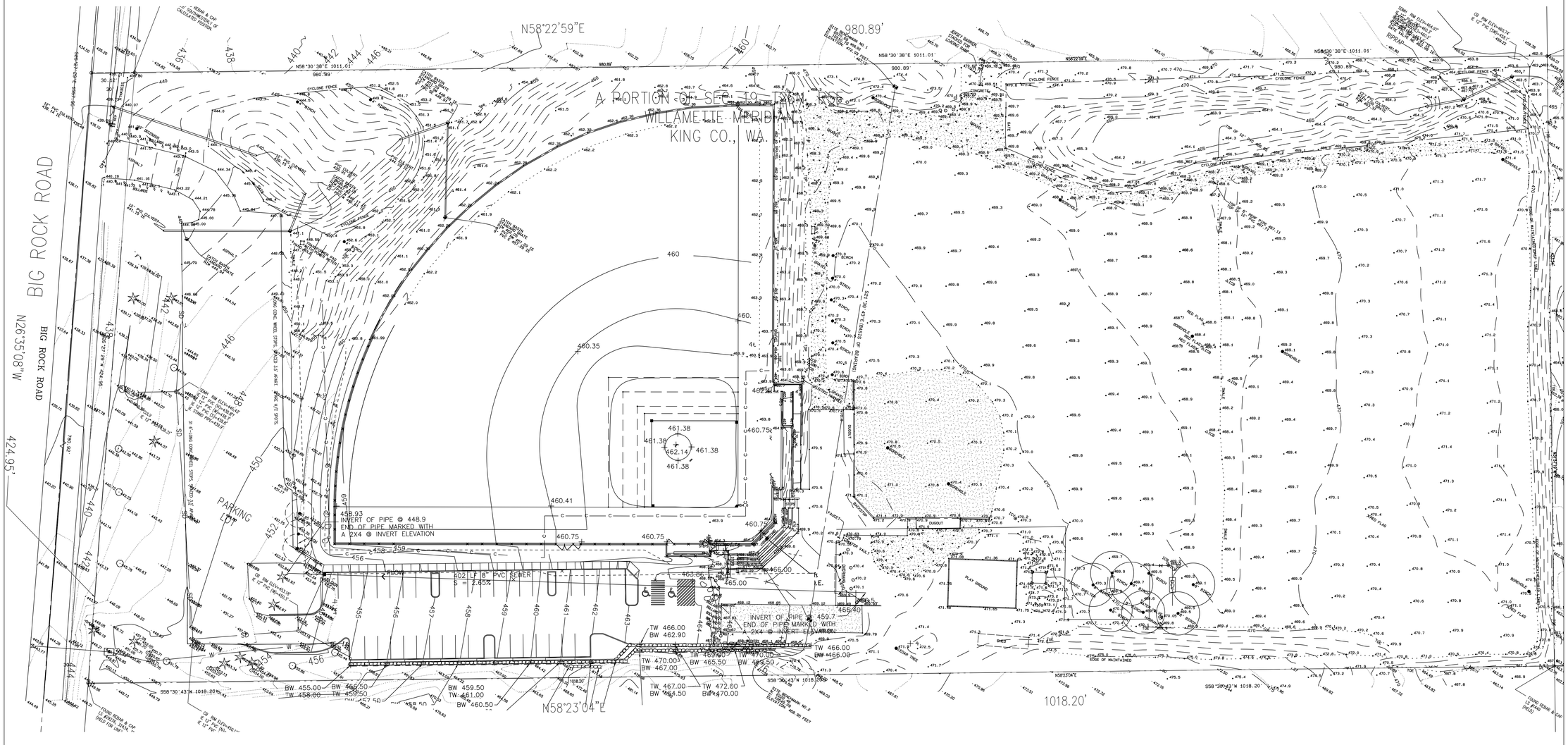

LEGAL DESCRIPTION

TRACT 25, DUVALL BERRY FARMS, ACCORDING TO THE PLAT THEREOF RECORDED IN VOLUME 25 OF PLATS, PAGE 5, RECORDS OF KING COUNTY, WASHINGTON.

NOTES

BASIS OF BEARING: SE LINE OF LOT 25 HOLDING REBAR & CAP FOUND AT CORNER COMMON TO LOTS 25, 26, & 14.

REFERENCE SURVEY: BOOK 130, PAGE 279, RECORDS OF KING COUNTY, WASHINGTON.

VERTICAL DATUM: HELD INVERT ELEVATION OF 417.78' FOR CL INVERT AT MH7A, AS-BUILT PLAN OF BIG ROCK ROAD AS PROVIDED BY THE CITY OF DUVALL.

LEGEND

- REBAR & CAP
- ROCKERY
- BOULDER
- DECIDUOUS TREE
- CONIFEROUS TREE
- STORM DRAIN MANHOLE
- CATCH BASIN
- WATER VAULT
- UTILITY POLE (POWER)
- GUY POLE
- YARD LIGHT
- JUNCTION BOX
- GUARD POST
- SANITARY SEWER MANHOLE
- WATER VALVE
- FIRE HYDRANT
- IRRIGATION CONTROL VALVE

NOT ALL UTILITIES SHOWN HERE HAVE BEEN ESTABLISHED BY FIELD SURVEY. SOME HAVE BEEN OBTAINED FROM AVAILABLE RECORDS AND SHOULD BE FIELD VERIFIED BEFORE DIGGING.

File: F-0.1 Big Rock CURRENT 30x42.dwg Plotted by: CorneliaW Date: 12-Aug-16 2:19:06pm

REVISION	DATE

City of Duvall
Small Town. Real Life.

BIG ROCK PARK
MULTI PURPOSE
FIELD

DA HOGAN
119 1st Avenue South, Suite 110
Seattle, Washington 98104
p. 206.285.0400
f. 206.285.0480

2-1-16
NORMAN E. LARSEN
STATE OF WASHINGTON
PROFESSIONAL LAND SURVEYOR
EXPIRES 12-15-2017

NORTH

0 30' 60'
SCALE: 1" = 30'

SEPA SET

DATE	8-12-16
SCALE	1"=30'
DRAWN	CPW
CHECKED	RSH

COPYRIGHT © 2016 D.A. HOGAN & ASSOCIATES

EXISTING
CONDITIONS

SHEET
F-0.1

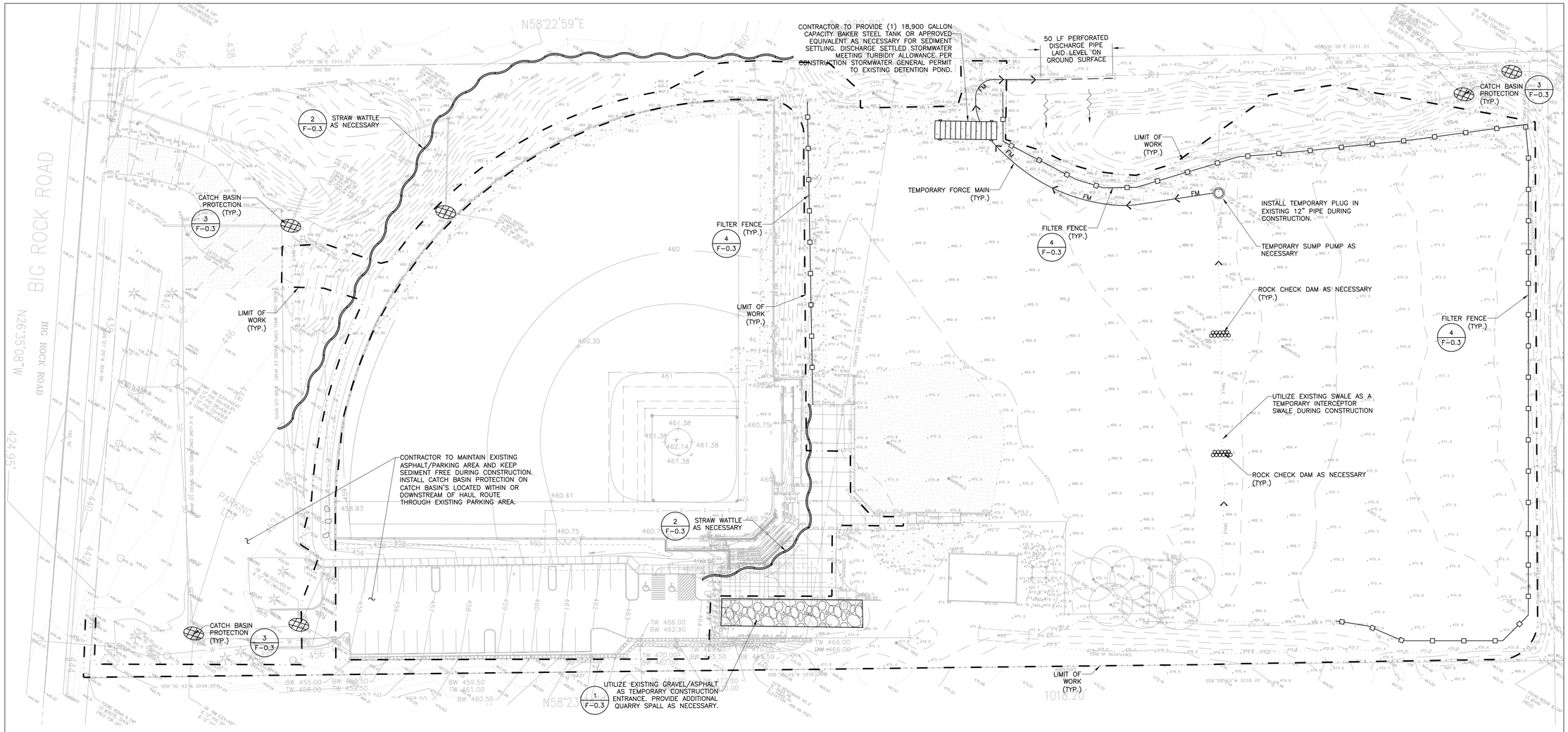

T.E.S.C. NOTES

T.E.S.C. NOTES SEE SHEET F-0.3

TESC LEGEND

- FILTER FENCE (4 / F-0.3)
- TEMPORARY INTERCEPTOR SWALE
- ROCK CHECK DAM
- FORCE MAIN
- BAKER TANK
- TEMPORARY STORAGE TANK
- STRAW WATTLE
- CATCH BASIN PROTECTION (3 / F-0.3)
- LIMIT OF WORK
- TEMPORARY CONSTRUCTION ENTRANCE (1 / F-0.3)

INSTALL CATCH BASIN PROTECTION AT ALL INLETS DOWNSTREAM OF THE SITE WITHIN 300' OF PROJECT LIMITS

811. Know what's below. Call before you dig.

REVISION	DATE

City of Duvall
Small Town. Real Life.

BIG ROCK PARK MULTI PURPOSE FIELD

DA HOGAN
119 1st Avenue South, Suite 110
Seattle, Washington 98104
p. 206.285.0400
f. 206.285.0480

STATE OF WASHINGTON
ROBERT S. HARDING
EXPIRES JULY 18, 2018
LANDSCAPE ARCHITECT

NORTH
0 30' 60'
SCALE: 1" = 30'

SEPA SET

DATE	8-12-16
SCALE	1"=30'
DRAWN	CPW/JNM
CHECKED	RSH

COPYRIGHT © 2016 D.A. HOGAN & ASSOCIATES

T.E.S.C. PLAN

SHEET
F-0.2

File: F-0.1 Big Rock CURRENT 30x42.dwg Plotted by: CorneliuW Date: 12-Aug-16 2:21:03pm

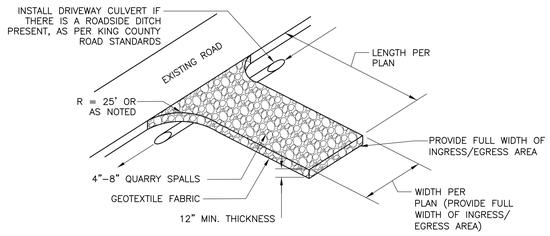

1 / F-0.3 TEMPORARY CONSTRUCTION ENTRANCE

NOT TO SCALE

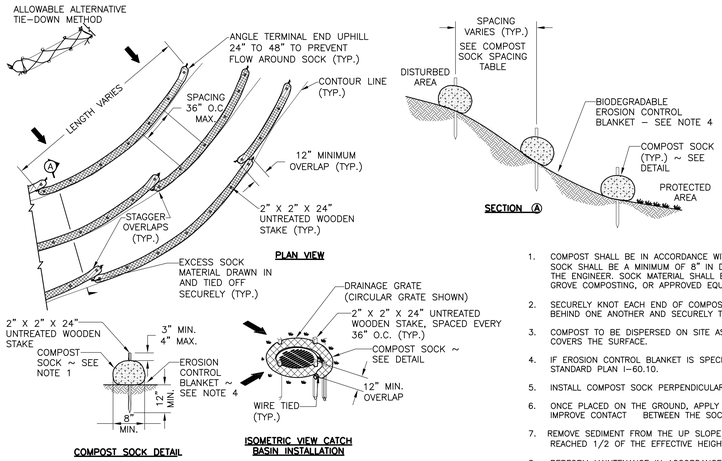

8" DIAMETER COMPOST SOCK SPACING TABLE	
SLOPE	MAXIMUM SPACING
1H : 1V	10' – 0"
2H : 1V	20' – 0"
3H : 1V	30' – 0"
4H : 1V	40' – 0"

1. COMPOST SHALL BE IN ACCORDANCE WITH WSDOT STANDARD SPECIFICATION 9.14.5(6). COMPOST SOCK SHALL BE A MINIMUM OF 8" IN DIAMETER OR SIZED TO SUIT CONDITIONS AS SPECIFIED BY THE ENGINEER. SOCK MATERIAL SHALL BE BIO–DEGRADABLE, PROVIDE COMPOST SOCK BY CEDAR GROVE COMPOSTING, OR APPROVED EQUIVALENT.
2. SECURELY KNOT EACH END OF COMPOST SOCK. OVERLAP ADJACENT COMPOST SOCK ENDS 12" BEHIND ONE ANOTHER AND SECURELY TIE TOGETHER.
3. COMPOST TO BE DISPERSED ON SITE AS DETERMINED BY THE ENGINEER, WHEN VEGETATION COVERS THE SURFACE.
4. IF EROSION CONTROL BLANKET IS SPECIFIED, PLACE COMPOST SOCK ON TOP OF BLANKET. SEE STANDARD PLAN I–60.10.
5. INSTALL COMPOST SOCK PERPENDICULAR TO FLOW ALONG CONTOURS.
6. ONCE PLACED ON THE GROUND, APPLY WEIGHT TO THE SOCK BY WALKING ON OR ROLLING TO IMPROVE CONTACT BETWEEN THE SOCK AND THE GROUND SURFACE.
7. REMOVE SEDIMENT FROM THE UP SLOPE SIDE OF THE COMPOST SOCK WHEN ACCUMULATION HAS REACHED 1/2 OF THE EFFECTIVE HEIGHT OF THE COMPOST SOCK.
8. PERFORM MAINTENANCE IN ACCORDANCE WITH WSDOT STANDARD SPECIFICATION 8–01.3(15).
9. REFER TO WSDOT STANDARD SPECIFICATION 8–01.3(16) FOR REMOVAL.

2 / F-0.3 COMPOST FILTER SOCK

NOT TO SCALE

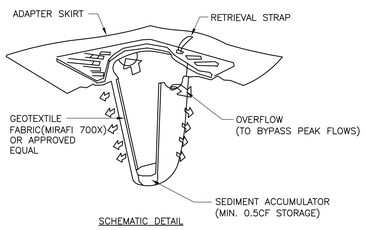

PROVIDE "STREAMGUARD SEDIMENT CATCH BASIN INSERT" OR APPROVED EQUAL

MANUFACTURER'S NAME: BOWHEAD ENVIRONMENTAL & SAFETY
ADDRESS: PO BOX 375 PRESTON, WA 98050
TELEPHONE: FOR INFORMATION: (800) 909–3677
WWW.SHOPBOWHEAD.COM

3 / F-0.3 CATCH BASIN INSERT

NOT TO SCALE

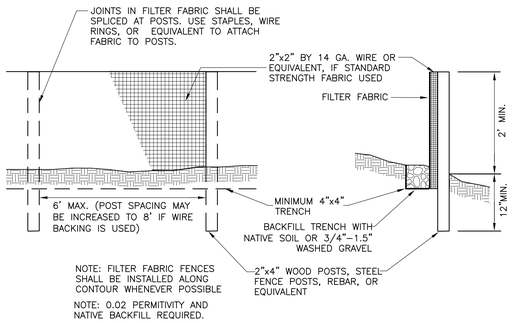

4 / F-0.3 REINFORCED SILT FENCE

NOT TO SCALE

T.E.S.C. NOTES

1. THE TESC FACILITIES SHOWN ON THE APPROVED PLAN ARE THE MINIMUM REQUIREMENTS FOR ANTICIPATED SITE CONDITIONS AND SHALL BE CONSTRUCTED AND IMPLEMENTED PRIOR TO ANY EXTENSIVE GRADING OR LAND CLEARING. THESE FACILITIES MUST BE SATISFACTORILY MAINTAINED UNTIL THE CONSTRUCTION AND LANDSCAPING IS COMPLETED AND THE POTENTIAL FOR ONSITE EROSION HAS PASSED. THE TESC PLANS ARE TO BE CONSIDERED A DYNAMIC MINIMUM GUIDELINE AND AS SUCH WILL MOST LIKELY HAVE TO BE CONTINUALLY EVALUATED AND/OR MODIFIED DEPENDING ON SITE CONDITIONS.
2. THE IMPLEMENTATION OF THESE TESC PLANS AND THE CONSTRUCTION, MAINTENANCE, REPLACEMENT, AND UPGRADING OF THESE TESC FACILITIES IS THE RESPONSIBILITY OF THE APPLICANT/CONTRACTOR UNTIL ALL CONSTRUCTION IS APPROVED.
3. THE BOUNDARIES OF THE CLEARING LIMITS SHOWN ON THIS PLAN SHALL BE CLEARLY FLAGGED IN THE FIELD PRIOR TO CONSTRUCTION. DURING THE CONSTRUCTION PERIOD, NO DISTURBANCE BEYOND THE FLAGGED CLEARING LIMITS SHALL BE PERMITTED. THE FLAGGING SHALL BE MAINTAINED BY THE APPLICANT/CONTRACTOR FOR THE DURATION OF CONSTRUCTION.
4. THE TESC FACILITIES SHOWN ON THIS PLAN MUST BE CONSTRUCTED IN CONJUNCTION WITH ALL CLEARING AND GRADING ACTIVITIES, AND IN SUCH A MANNER AS TO INSURE THAT SEDIMENT LADEN WATER DOES NOT ENTER THE DRAINAGE SYSTEM OR VIOLATE APPLICABLE WATER STANDARDS.
5. THE TESC FACILITIES SHALL BE INSPECTED DAILY BY THE APPLICANT/CONTRACTOR AND MAINTAINED AS NECESSARY TO ENSURE THEIR CONTINUED FUNCTIONING.
6. THE TESC FACILITIES ON INACTIVE SITES SHALL BE INSPECTED AND MAINTAINED A MINIMUM OF ONCE A MONTH OR WITHIN THE 48 HOURS FOLLOWING A STORM EVENT.
7. DURING THE TIME PERIOD OF APRIL 1 THROUGH SEPTEMBER 30: ALL AREA STRIPPED OF VEGETATION THAT ARE TO BE LEFT UNWORKED FOR MORE THAN15 DAYS SHALL BE IMMEDIATELY STABILIZED WITH THE APPROVED TESC METHODS (E.G., SEEDING, MULCHING, NETTING, EROSION BLANKETS, ETC.). PHASING THE VEGETATION STRIPPING IN ORDER TO MINIMIZE THE EFFORT COVERING THE AREA IS THE BEST MANAGEMENT PRACTICE OF ALL.
8. DURING THE TIME PERIOD OF APRIL 1 THROUGH SEPTEMBER 30: ANY AREA NEEDING TESC MEASURES, NOT REQUIRING IMMEDIATE ATTENTION, SHALL BE ADDRESSED WITHIN FIFTEEN (15) DAYS.
9. DURING THE TIME PERIOD OF OCTOBER 1 THROUGH MARCH 31, ALL PROJECT DISTURBED AREAS GREATER THAN 5,000 SQUARE FEET THAT ARE TO BE LEFT UNWORKED FOR MORE THAN 12 HOURS SHALL BE COVERED BY ONE OF THE FOLLOWING COVER MEASURES: MULCH, SODDING, PLASTIC COVERING OR JUTE–MATTING.
10. AT NO TIME SHALL MORE THAN ONE–FOOT OF SEDIMENT BE ALLOWED TO ACCUMULATE WITHIN A CATCH BASIN. ALL CATCH BASINS AND CONVEYANCE LINES SHALL BE CLEANED PRIOR TO FINAL CITY APPROVAL. THE CLEANING OPERATION SHALL NOT FLUSH SEDIMENT–LADEN WATER INTO THE DOWNSTREAM SYSTEM.
11. STABILIZED CONSTRUCTION ENTRANCES AND WASH PADS SHALL BE INSTALLED AT THE BEGINNING OF CONSTRUCTION AND MAINTAINED FOR THE DURATION OF THE PROJECT. ADDITIONAL MEASURES MAY BE REQUIRED TO INSURE THAT ALL PAVED AREAS ARE KEPT CLEAN FOR THE DURATION OF THE PROJECT. (RCW 46.61.655).
12. ANY PERMANENT RETENTION/DETENTION FACILITY USED AS A TEMPORARY SETTLING BASIN SHALL BE MODIFIED WITH THE NECESSARY EROSION CONTROL MEASURES AND SHALL PROVIDE ADEQUATE STORAGE CAPACITY. IF THE PERMANENT FACILITY IS TO FUNCTION ULTIMATELY AS AN INFILTRATION OR DISPERSION SYSTEM, THE FACILITY SHALL NOT BE USED AS A TEMPORARY SETTLING BASIN.
13. WHERE SEEDING FOR TEMPORARY EROSION CONTROL IS REQUIRED, FAST GERMINATING GRASSES SHALL BE APPLIED AT AN APPROPRIATE RATE (SEE HYDRO–SEEDING SPECIFICATIONS).
14. WHERE STRAW MULCH FOR TEMPORARY EROSION CONTROL IS REQUIRED, IT SHALL BE APPLIED AT A MINIMUM THICKNESS OF TWO INCHES OR SUFFICIENT THICKNESS TO COMPLETELY COVER THE SOIL, WHICHEVER IS GREATER.
15. WHERE DISTURBED AREAS HAVE SLOPES ARE GREATER THAN 15% JUTE MATTING SHALL BE USED TO COVER AND PROTECT THE EARTH SURFACE.

REVISION	DATE

City of Duvall
Small Town. Real Life.

BIG ROCK PARK MULTI PURPOSE FIELD

DA HOGAN
119 1st Avenue South, Suite 110
Seattle, Washington 98104
p. 206.285.0400
f. 206.285.0480

STATE OF WASHINGTON
ROBERT S. HARDING
EXP. 12/31/17
LANDSCAPE ARCHITECT

SEPA SET

DATE	8-12-16
SCALE	NTS
DRAWN	CPW
CHECKED	RSH

COPYRIGHT © 2016 D.A. HOGAN & ASSOCIATES

TESC DETAILS & NOTES

SHEET

F-0.3

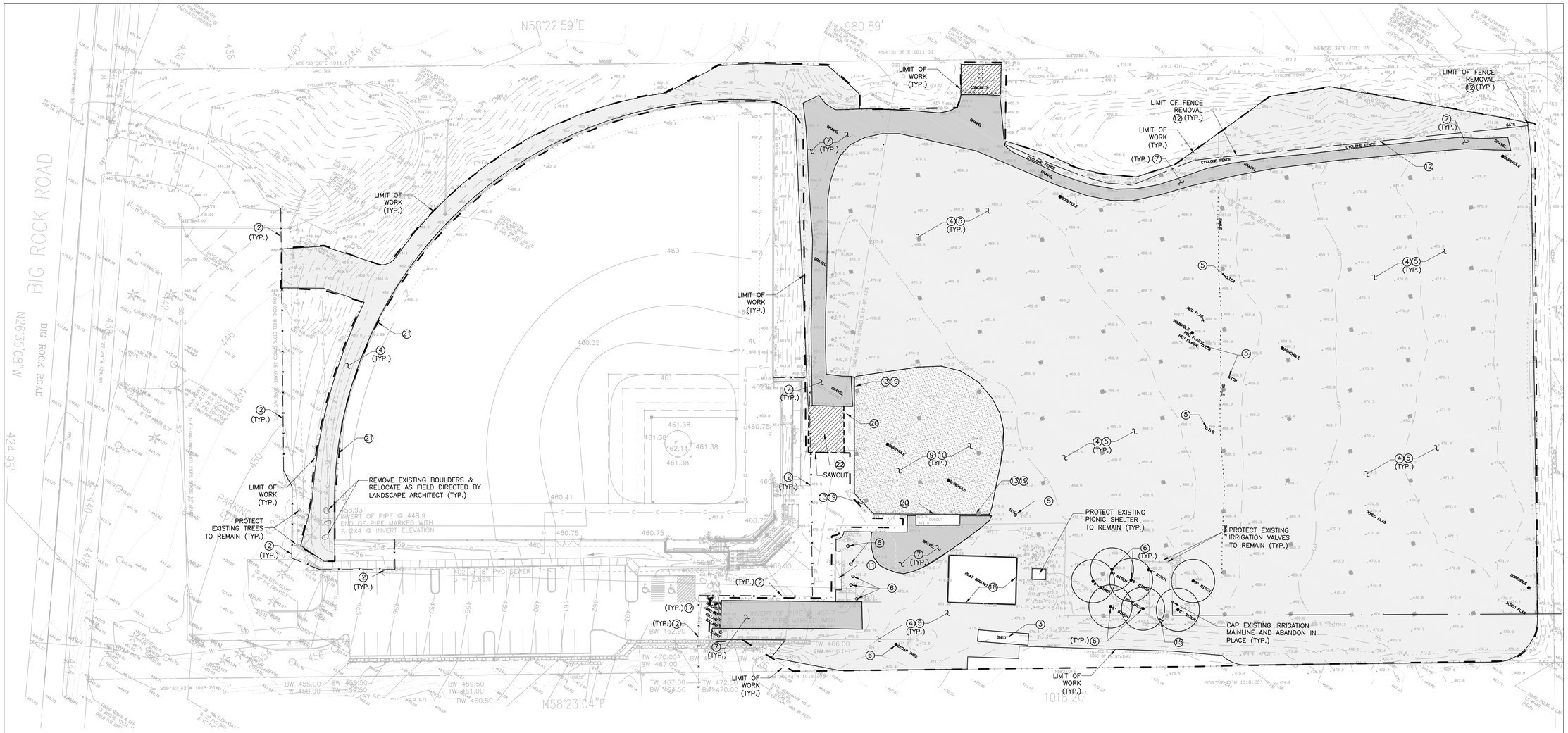

DEMOLITION NOTES

1. CALL BEFORE YOU DIG. LOCATE, IDENTIFY AND VERIFY LOCATION, ELEVATION, AND CONDITION OF ALL SITE UTILITIES PRIOR TO COMMENCING THE WORK. PROTECT ALL UTILITIES TO REMAIN.

(2) CONTRACTOR SHALL BE RESPONSIBLE FOR SECURING ALL GATES AND FENCES AT PERIMETER OF THIS SITE TO ESTABLISH A SECURE WORK AREA. WORK SHALL INCLUDE TEMPORARY 6' HIGH CHAIN LINK FENCING AT THE PERIMETER OF THE PROJECT AREA.

(3) REMOVE EXISTING STORAGE SHED AND DISPOSE OFF OF SITE.

(4) STRIP AREA WITHIN LIMITS OF DISTURBANCE OF EXISTING SOD AND ORGANIC MATERIALS AND DISPOSE OF OFF SITE. ALL EXCESS AND UNSUITABLE SOIL MATERIALS SHALL BE REMOVED AND DISPOSED OF OFF SITE.

(5) REMOVE EXISTING IRRIGATION SYSTEM AND CORRESPONDING BOXES WITHIN LIMIT OF WORK IF ENCOUNTERED AND DELIVER TO THE OWNER ON SITE. FIELD LOCATE, CAP AND PROTECT EXISTING IRRIGATION MAINLINE TO REMAIN. MAINTAIN IRRIGATION SYSTEM OPERATION FOR GRASS AREA SOUTH OF PROJECT SITE.

(6) REMOVE EXISTING TREE INCLUDING STUMP AND DISPOSE OF OFF SITE. EXACT TREES/SHRUBS SHALL BE FIELD VERIFIED WITH THE LANDSCAPE ARCHITECT PRIOR TO REMOVAL. BACKFILL AND COMPACT EXCAVATED AREAS. SEE LANDSCAPE PLAN L-1.1 FOR TREE REPLACEMENT PLANTING.

(7) REMOVE EXISTING GRAVEL AND DISPOSE OF ONSITE AS PART OF CUT/FILL BALANCE

8. BACKFILL ALL EXCAVATIONS WITH STRUCTURAL FILL AND COMPACT TO 95%.

(9) REMOVE EXISTING PLATES AND ANCHORS AND DELIVER TO THE OWNER ONSITE.

(10) REMOVE EXISTING INFIELD MIX MATERIALS AND INCORPORATE ONSITE AS PART OF CUT/FILL BALANCE

NOTE LEGEND

1. (INDICATES GENERAL CONSTRUCTION NOTE)
(3) (INDICATES SPECIFIC CONSTRUCTION KEYNOTE)

(11) PROTECT EXISTING STRUCTURE TO REMAIN.

(12) REMOVE EXISTING CHAINLINK FENCING, FOOTINGS, ALL APPLIANCES AND DISPOSE OF OFF SITE.

(13) PROTECT EXISTING CONCRETE CURBING AND FENCING TO REMAIN

14. PROTECT EXISTING UTILITIES TO REMAIN.

(15) PROTECT EXISTING HYDRANT TO REMAIN

16. PROTECT EXISTING PAVING TO REMAIN

(17) REMOVE EXISTING BOLLARDS AND DISPOSE OFF OF SITE.

(18) REMOVE EXISTING PLAYGROUND STRUCTURE AND DISPOSE OFF OF SITE.

(19) PROTECT EXISTING BACKSTOP AND WINGFENCING AND CURB TO REMAIN

(20) PROTECT EXISTING DUGOUT TO REMAIN

(21) PROTECT EXISTING BASEBALL OUTFIELD FENCE THROUGHOUT CONSTRUCTION.

(22) SAWCUT, REMOVE AND PATCH EXISTING PAVING AND CURB AS NEEDED TO INSTALL NEW ELECTRICAL IMPROVEMENTS. COORDINATE WITH ELECTRICAL DRAWINGS.

DEMOLITION LEGEND

- EXISTING NATURAL TURF TO BE REMOVED AND DISPOSED OF OFF SITE
- GRAVEL SURFACING TO BE REMOVED
- INFIELD SOIL TO BE REMOVED AND DISPOSED OFF OF SITE
- EXISTING PAVING TO BE REMOVED AND DISPOSED OFF OF SITE
- LIMIT OF WORK
- SAWCUT LINE
- SECURITY FENCING

811. Know what's below. Call before you dig.

REVISION	DATE

City of Duvall
Small Town. Real Life.

BIG ROCK PARK MULTI PURPOSE FIELD

DA HOGAN
119 1st Avenue South, Suite 110
Seattle, Washington 98104
p. 206.285.0400
f. 206.285.0480

STATE OF WASHINGTON
ROBERT S. HOGAN
LICENSE NO. 2-19
LANDSCAPE ARCHITECT

NORTH

0 30' 60'
SCALE: 1" = 30'

SEPA SET

DATE	8-12-16
SCALE	1"=30'
DRAWN	CPW
CHECKED	RSH

COPYRIGHT © 2016 D.A. HOGAN & ASSOCIATES

DEMOLITION PLAN

SHEET

F-0.4

File: F-0.1 Big Rock CURRENT 30x42.dwg Plotted by: CorneliaW Date: 12-Aug-16 2:24:31pm

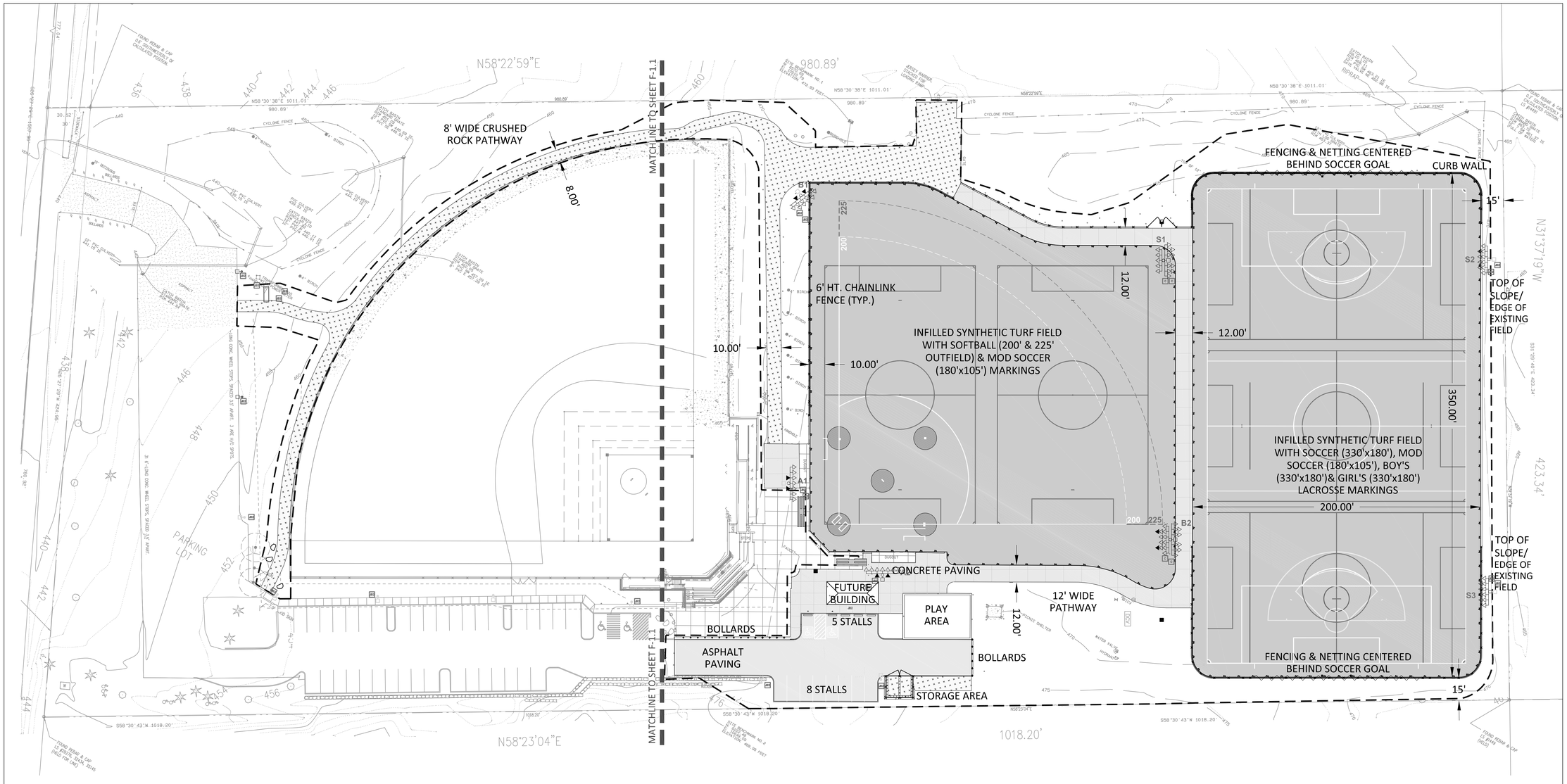

REVISION	DATE

City of Duvall
Small Town. Real Life.

BIG ROCK PARK MULTI PURPOSE FIELD

DA HOGAN
119 1st Avenue South, Suite 110
Seattle, Washington 98104
p. 206.285.0400
f. 206.285.0480

STATE OF WASHINGTON
ROBERT S. HANSEN
REGISTERED
LANDSCAPE ARCHITECT

NORTH

0 30' 60'
SCALE: 1" = 30'

SEPA SET

DATE	8-12-16
SCALE	1"=30'
DRAWN	CPW
CHECKED	RSH

COPYRIGHT © 2016 D.A. HOGAN & ASSOCIATES

SITE OVERVIEW

SHEET

F-1.0

File: F-0.1 Big Rock CURRENT 30x42.dwg Plotted by: CorneliuW Date: 12-Aug-16 3:10:36pm

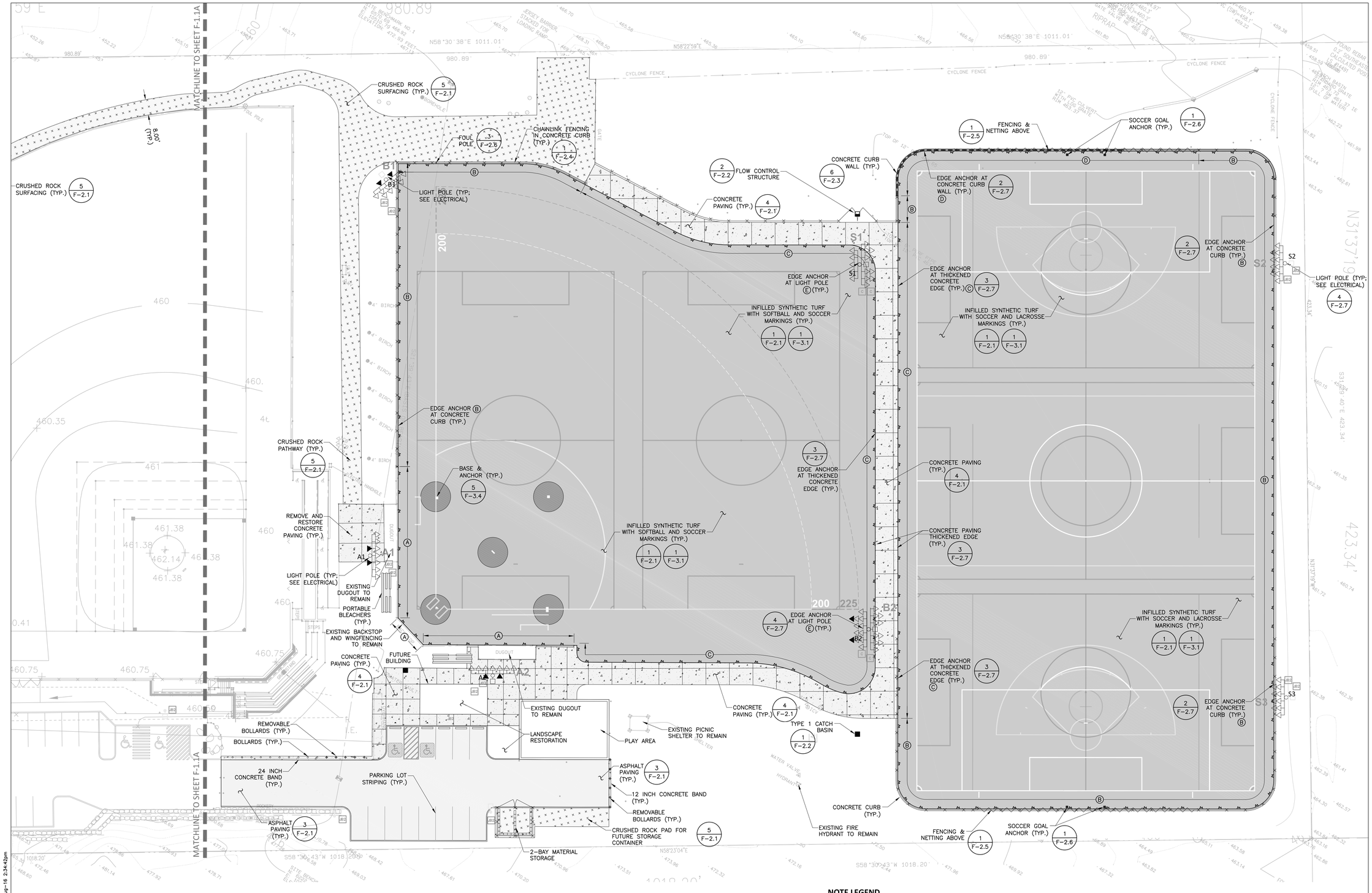

EDGE ANCHOR KEY

- (A) EDGE ANCHOR AT EXISTING CONCRETE CURB — 2/F-2.7
- (B) EDGE ANCHOR AT NEW CONCRETE CURB — 2/F-2.7
- (C) EDGE ANCHOR AT THICKENED CONCRETE EDGE — 3/F-2.7
- (D) EDGE ANCHOR AT CONCRETE CURB WALL — 6/F-2.3
- (E) EDGE ANCHOR AT LIGHTPOLE — 4/F-2.7

LAYOUT NOTES

NOTE LEGEND
1. (INDICATES GENERAL CONSTRUCTION NOTE)
(3) (INDICATES SPECIFIC CONSTRUCTION KEYNOTE)

1. MAINTAIN EXISTING FENCING AND/OR PROVIDE 6 FOOT HIGH TEMPORARY CHAINLINK FENCING TO SECURE THE PROJECT AREA.
2. INSTALL TURF ANCHOR AROUND THE ENTIRE PERIMETER OF THE NEW SYNTHETIC TURF FIELD EVENT AREA.
3. PROTECT ALL STRUCTURES TO REMAIN.
4. SEE FENCING PLAN FOR FENCE HEIGHT AND TYPE.
5. COORDINATE WITH ELECTRICAL DRAWINGS FOR LIGHTPOLE AND BOX LOCATIONS.
6. RESTORE AND HYDROSEED ALL DISTURBED NON-SURFACES PERIMETER AREAS TO BETTER OR ORIGINAL CONDITION UNLESS OTHERWISE NOTED.
7. MEET AND MATCH EXISTING ADJACENT SURFACE.
8. SEE LANDSCAPE PLANTING PLAN FOR LIMIT OF SITE RESTORATION.

LAYOUT LEGEND

- GREEN OR BROWN COLORED SYNTHETIC TURF AND PERMEABLE AGGREGATE
- CRUSHED ROCK
- ASPHALT PAVING
- CONCRETE PAVING
- CHAINLINK FENCE AND CONCRETE CURB
- CHAINLINK FENCE
- CHAINLINK FENCE AND NETTING ABOVE
- CONCRETE CURBING
- LIMIT OF SYNTHETIC TURF AND CONCRETE EDGE ANCHOR
- CONCRETE CURB WALL
- FLOW CONTROL STRCUTURE
- CATCH BASIN INLET (C.B.I.) TYPE 1

REVISION	DATE

City of Duvall
Small Town. Real Life.

BIG ROCK PARK MULTI PURPOSE FIELD

DA HOGAN
119 1st Avenue South, Suite 110
Seattle, Washington 98104
p. 206.285.0400
f. 206.285.0480

STATE OF WASHINGTON
ROBERT S. HARDING
LANDSCAPE ARCHITECT

NORTH
0 20' 40'
SCALE: 1" = 20'

SEPA SET

DATE	8-12-16
SCALE	1"=20'
DRAWN	CPW
CHECKED	RSH

COPYRIGHT © 2016 D.A. HOGAN & ASSOCIATES

ATHLETIC FIELDS LAYOUT PLAN

SHEET
F-1.1

File: F-0.1 Big Rock CURRENT 30x42.dwg Plotted by: CorneliaW Date: 12-Aug-16 2:34:42pm

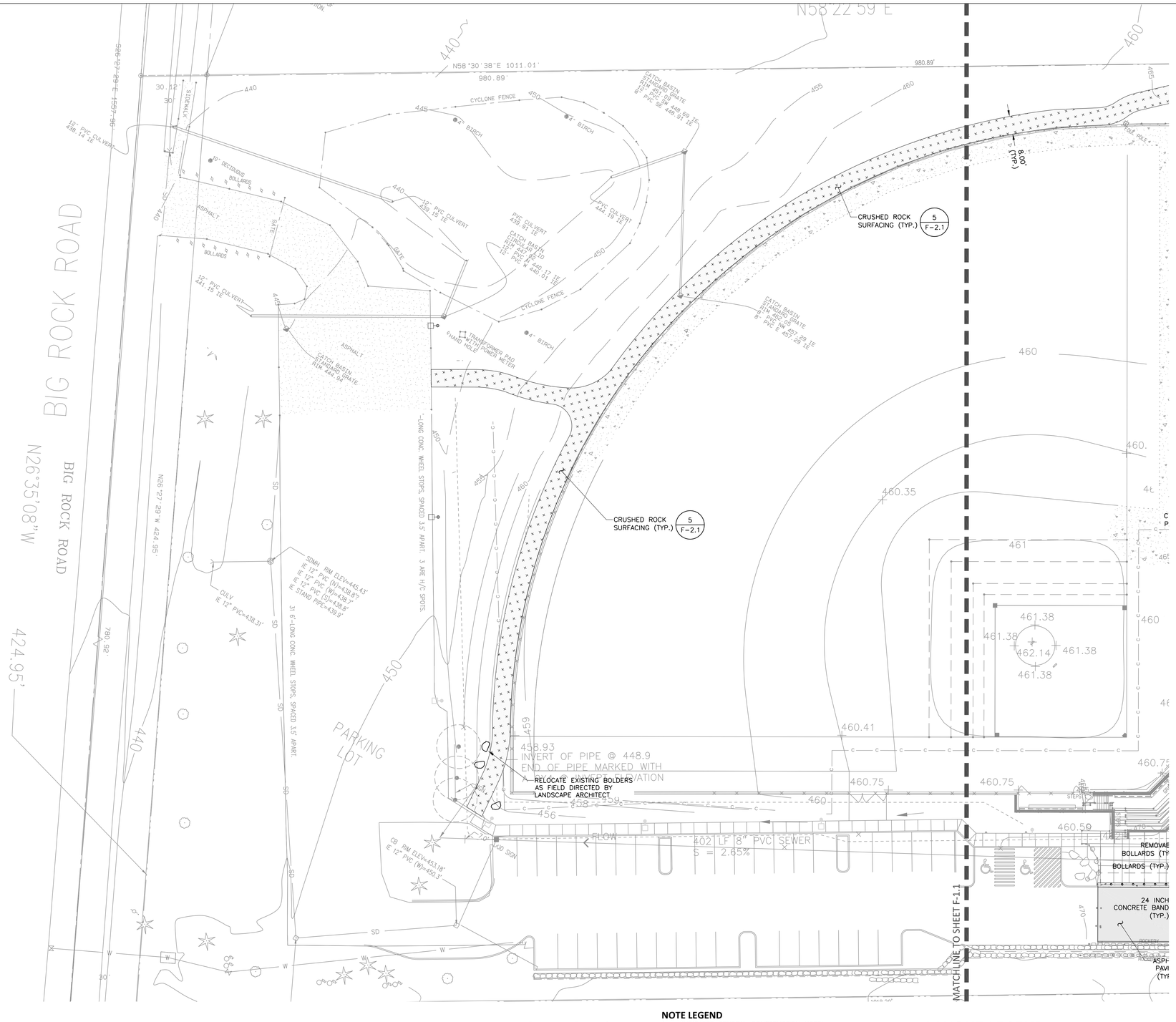

LAYOUT NOTES

1. MAINTAIN EXISTING FENCING AND/OR PROVIDE 6 FOOT HIGH TEMPORARY CHAINLINK FENCING TO SECURE THE PROJECT AREA.
2. PROTECT ALL STRUCTURES TO REMAIN.
3. COORDINATE WITH ELECTRICAL DRAWINGS FOR LIGHTPOLE AND BOX LOCATIONS.
4. RESTORE AND HYDROSEED ALL DISTURBED NON-SURFACES PERIMETER AREAS TO BETTER OR ORIGINAL CONDITION UNLESS OTHERWISE NOTED.
5. MEET AND MATCH EXISTING ADJACENT SURFACE.

NOTE LEGEND

1. (INDICATES GENERAL CONSTRUCTION NOTE)
3. (INDICATES SPECIFIC CONSTRUCTION KEYNOTE)

LAYOUT LEGEND

- CRUSHED ROCK
- ASPHALT PAVING
- CONCRETE PAVING
- LANDSCAPE RESTORATION

REVISION	DATE

City of Duvall
Small Town. Real Life.

BIG ROCK PARK
MULTI PURPOSE
FIELD

DA HOGAN
119 1st Avenue South, Suite 110
Seattle, Washington 98104
p. 206.285.0400
f. 206.285.0480

STATE OF WASHINGTON
ROBERT S. HARDING
EXP. 12/31/2017 NO. 618
LANDSCAPE ARCHITECT

NORTH

0 20' 40'
SCALE: 1" = 20'

SEPA SET

DATE	8-12-16
SCALE	1"=20'
DRAWN	CPW
CHECKED	RSH

COPYRIGHT © 2016 D.A. HOGAN & ASSOCIATES

PARKING LOT &
PATHWAY
LAYOUT PLAN

SHEET

F-1.1A

File: F-0.1 Big Rock CURRENT 30x42.dwg Plotted by: CorneliaW Date: 12-Aug-16 2:37:33pm

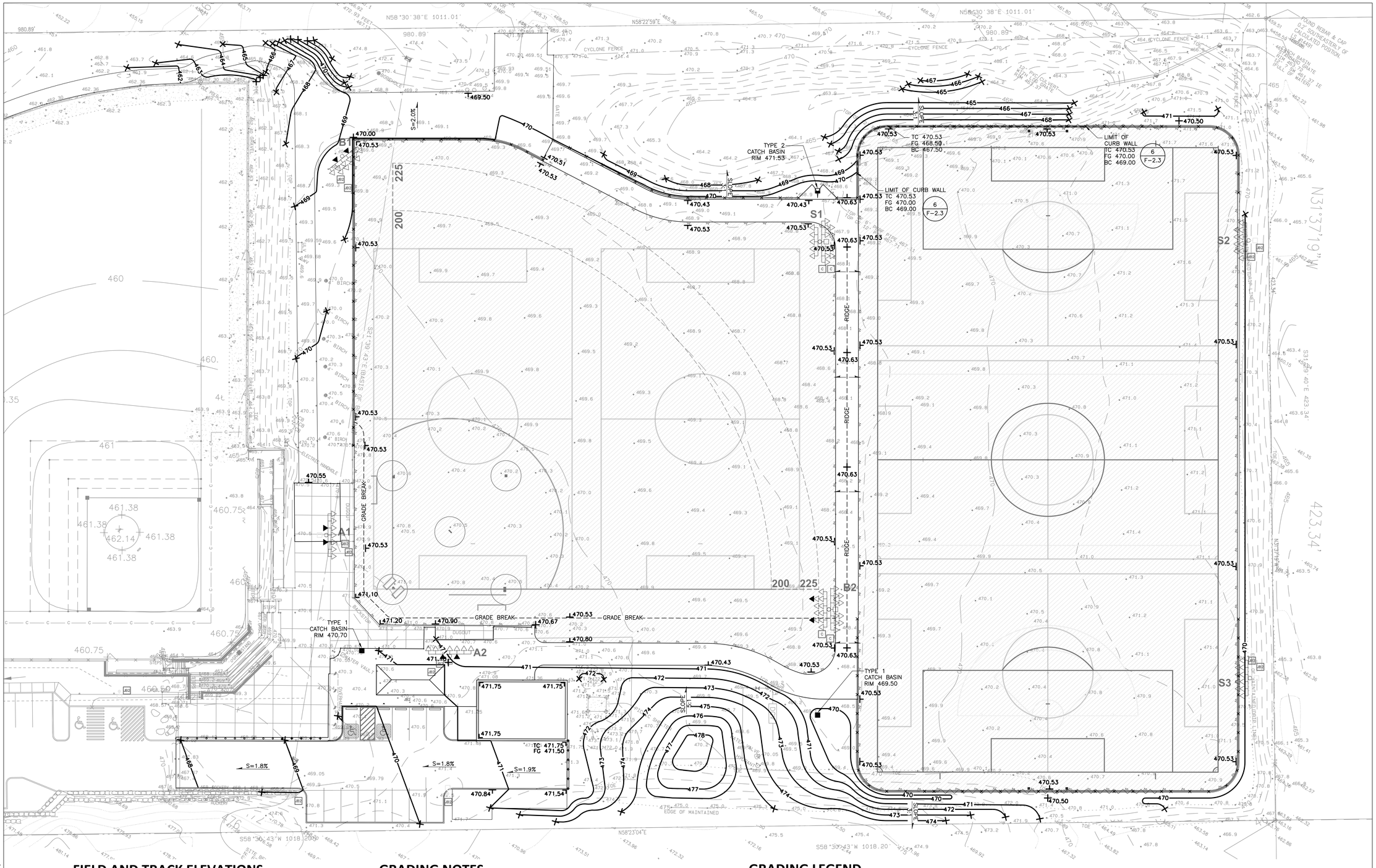

FIELD AND TRACK ELEVATIONS

SYNTHETIC TURF FIELD:

MULTIPURPOSE FIELD (NORTH):

FINISH GRADE OF SYNTHETIC TURF INFILL:	470.53
FINISH GRADE OF ELASTIC LAYER PAD:	470.42
FINISH GRADE OF TOP COURSE PERMEABLE AGGREGATE:	470.33
FINISH GRADE OF BASE COURSE PERMEABLE AGGREGATE:	470.16
SUBGRADE ELEVATION:	470.50

SOFTBALL FIELD (SOUTH):

FINISH GRADE OF SYNTHETIC TURF INFILL:	470.53
FINISH GRADE OF ELASTIC LAYER PAD:	470.42
FINISH GRADE OF TOP COURSE PERMEABLE AGGREGATE:	470.33
FINISH GRADE OF BASE COURSE PERMEABLE AGGREGATE:	470.16
SUBGRADE ELEVATION:	470.50

GRADING NOTES

1. THE CONTRACTOR SHALL CALL AND NOTIFY DIGALERT AT 8–1–1 A MINIMUM OF 2 WORKING DAYS BEFORE DEMOLITION, DIGGING, OR GRADING OPERATIONS OCCUR.
2. NEW CONTOURS SHOWN ARE FINISH GRADE ELEVATIONS.
3. BACKFILL AND COMPACT EXCAVATED AREAS RESULTING FROM DEMOLITION ACTIVITIES WITH SELECT FILL TO 95% WITH 12" MAX LIFTS.
4. STRIP FIELD AREA OF EXISTING SOD AND ORGANIC MATERIALS AND DISPOSE OF OFF SITE. ALL EXCESS AND UNSUITABLE SOIL MATERIALS SHALL BE REMOVED AND DISPOSED OF OFF SITE.
5. THE CONTRACTOR SHALL NOTIFY THE ENGINEER IN THE EVENT OR DISCOVERY OF POOR SOILS, GROUNDWATER OR DISCREPANCIES IN THE EXISTING CONDITIONS AS NOTED ON THE PLANS.
6. ALL PERIMETER PAVING SHALL MEET AND MATCH ADJACENT SURFACES.

NOTE LEGEND

1. (INDICATES GENERAL CONSTRUCTION NOTE)
3. (INDICATES SPECIFIC CONSTRUCTION KEYNOTE)

GRADING LEGEND

110	EXISTING CONTOUR LINES
470.53	SPOT ELEVATION
470	NEW CONTOUR LINES
470.5	NEW HALF CONTOUR LINES
S=2.0%	SURFACE SLOPE
c	CONSTANT SURFACE SLOPE
	MATCH TO EXISTING
	LIMIT OF PERMEABLE AGGREGATE
	CONCRETE CURB WALL
	TYPE 1 CATCH BASIN
	FLOW CONTROL STRUCTURE
	CHAINLINK FENCE AND CONCRETE CURB
	CHAINLINK FENCE
TC 474.85	TOP OF CURB WALL ELEVATION
BC 469.40	BOTTOM OF CURB WALL ELEVATION
FG 470.40	FINISH GRADE ELEVATION AT CURB WALL

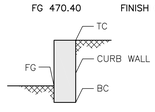

Know what's below. Call before you dig.

File: F-0.1 Big Rock CURRENT 30x42.dwg Plotted by: CorneliaW Date: 12-Aug-16 2:38:20pm

REVISION	DATE

City of Duvall
Small Town. Real Life.

BIG ROCK PARK
MULTI PURPOSE
FIELD

DA HOGAN
119 1st Avenue South, Suite 110
Seattle, Washington 98104
p. 206.285.0400
f. 206.285.0480

STATE OF WASHINGTON
ROBERT S. HANDING
LANDSCAPE ARCHITECT

NORTH

0 20' 40'
SCALE: 1" = 20'

SEPA SET

DATE	8-12-16
SCALE	1"=20'
DRAWN	CPW
CHECKED	RSH

COPYRIGHT © 2016 D.A. HOGAN & ASSOCIATES

ATHLETIC FIELDS
GRADING PLAN

SHEET
F-1.2

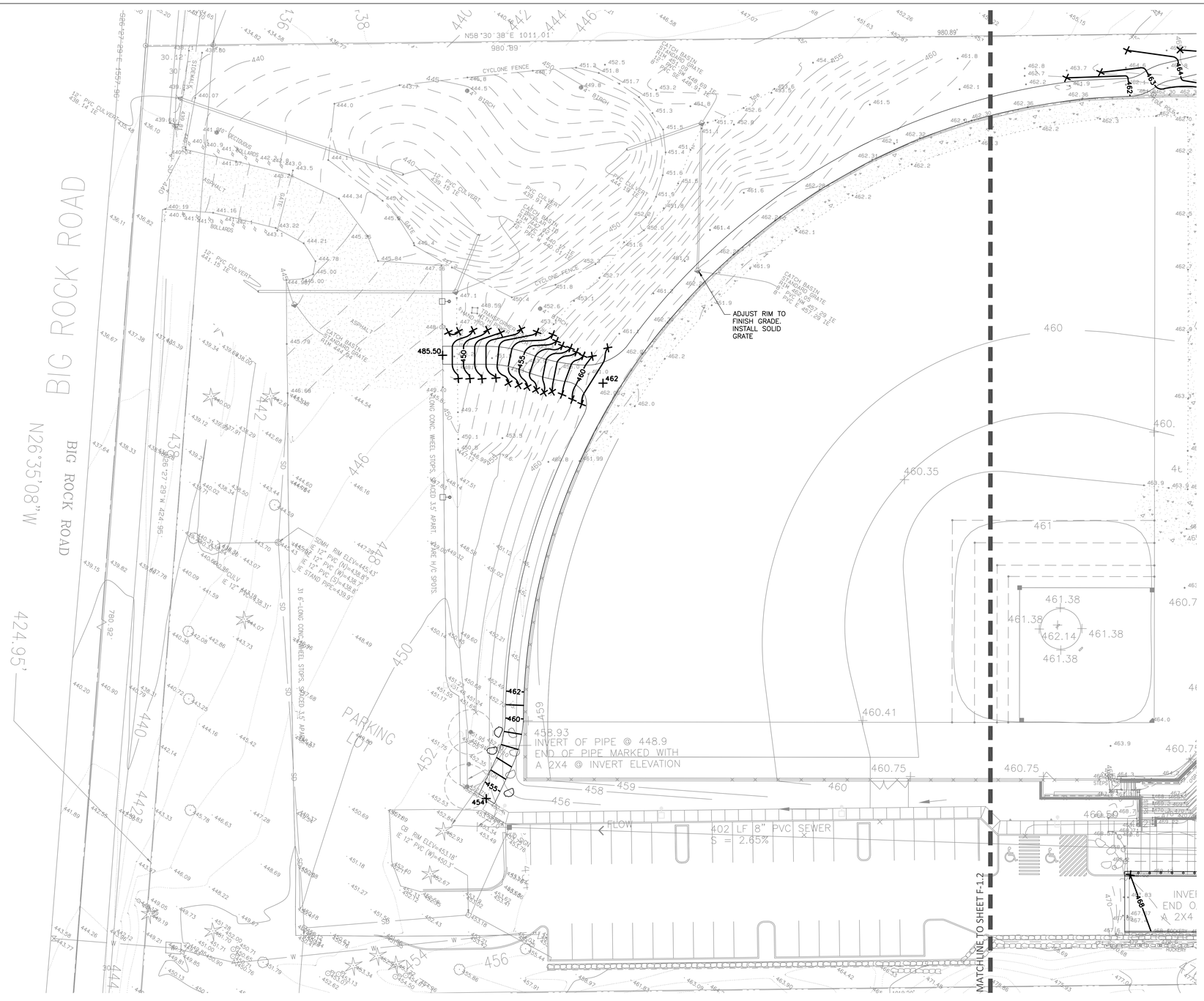

GRADING NOTES

1. THE CONTRACTOR SHALL CALL AND NOTIFY DIGALERT AT 8-1-1 A MINIMUM OF 2 WORKING DAYS BEFORE DEMOLITION, DIGGING, OR GRADING OPERATIONS OCCUR.
2. NEW CONTOURS SHOWN ARE FINISH GRADE ELEVATIONS.
3. BACKFILL AND COMPACT EXCAVATED AREAS RESULTING FROM DEMOLITION ACTIVITIES WITH SELECT FILL TO 95% WITH 12" MAX LIFTS.
4. STRIP FIELD AREA OF EXISTING SOD AND ORGANIC MATERIALS AND DISPOSE OF OFF SITE. ALL EXCESS AND UNSUITABLE SOIL MATERIALS SHALL BE REMOVED AND DISPOSED OF OFF SITE.
5. THE CONTRACTOR SHALL NOTIFY THE ENGINEER IN THE EVENT OR DISCOVERY OF POOR SOILS, GROUNDWATER OR DISCREPANCIES IN THE EXISTING CONDITIONS AS NOTED ON THE PLANS.
6. ALL PERIMETER PAVING SHALL MEET AND MATCH ADJACENT SURFACES.

NOTE LEGEND

1. (INDICATES GENERAL CONSTRUCTION NOTE)
3. (INDICATES SPECIFIC CONSTRUCTION KEYNOTE)

GRADING LEGEND

110	EXISTING CONTOUR LINES
470.53	SPOT ELEVATION
470	NEW CONTOUR LINES
470.5	NEW HALF CONTOUR LINES
S=2.0%	SURFACE SLOPE
c	CONSTANT SURFACE SLOPE
	MATCH TO EXISTING
	CHAINLINK FENCE AND CONCRETE CURB
	CHAINLINK FENCE

Know what's below. Call before you dig.

File: F-0.1 Big Rock CURRENT 30x42.dwg Plotted by: CorneliaW Date: 12-Aug-16 2:38:54pm

REVISION	DATE

City of Duvall
Small Town. Real Life.

BIG ROCK PARK MULTI PURPOSE FIELD

DA HOGAN
119 1st Avenue South, Suite 110
Seattle, Washington 98104
p. 206.285.0400
f. 206.285.0480

STATE OF WASHINGTON
ROBERT S. HARDING
LANDSCAPE ARCHITECT

NORTH

0 20' 40'
SCALE: 1" = 20'

SEPA SET

DATE	8-12-16
SCALE	1"=20'
DRAWN	CPW
CHECKED	RSH

COPYRIGHT © 2016 D.A. HOGAN & ASSOCIATES

PARKING LOT & PATHWAY GRADING PLAN

SHEET

F-1.2A

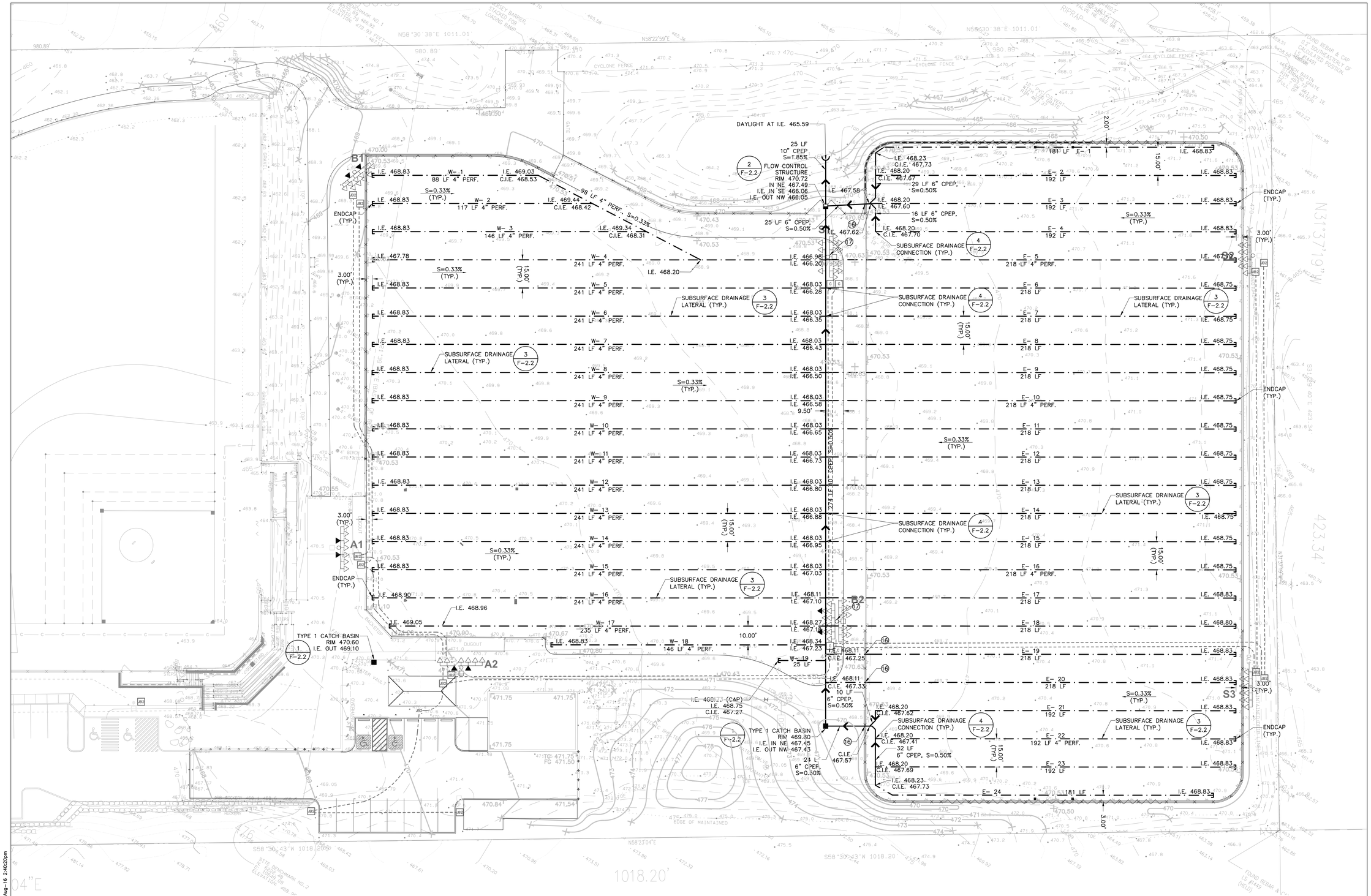

DRAINAGE NOTES

1. SUBSURFACE DRAINAGE COLLECTOR PIPE CAN BE INSTALLED PRIOR TO FINAL ACCEPTANCE OF THE FIELD SUBGRADE.
2. COORDINATION: IT IS THE RESPONSIBILITY OF THE CONTRACTOR TO ENSURE THAT THE IRRIGATION PIPING IS INSTALLED AT A SUFFICIENT DEPTH BELOW SUBGRADE BEFORE THE TRENCHING FOR THE SUBSURFACE DRAINAGE SYSTEMS TO AVOID CONFLICTS BETWEEN SYSTEMS.
3. TRENCHING FOR THE SUBSURFACE DRAINAGE LATERALS SHALL NOT PROCEED UNTIL THE IRRIGATION SYSTEM PIPING HAS BEEN BACKFILLED AND COMPACTED AND THE FIELD SUBGRADE IS APPROVED BY ENGINEER.
4. TRENCH EXCAVATION SHALL BE MADE TO THE ALIGNMENT, ELEVATION, GRADE AND SLOPE AS INDICATED ON THE DRAWINGS. TRENCHING SHALL BE ACCOMPLISHED UTILIZING EQUIPMENT WITH SLOPE AND DEPTH CONTROL, SUCH AS "LASER PLANE CONTROL SYSTEM", SO AS TO ENSURE ACCURACY IN THE BOTTOM OF THE TRENCH.
5. NO HIGH POINTS ABOVE DESIGNATED INVERT OR CALCULATED TRENCH BOTTOM ELEVATION WILL BE PERMITTED. NO SLOUGHING OF SITE MATERIAL OR LOOSE EXCAVATED SOIL WILL BE PERMITTED TO REMAIN IN THE TRENCHES.
6. SURPLUS EXCAVATED SOIL SHALL BE REMOVED FROM THE FIELD AREA PRIOR TO COMMENCING ON THE NEXT ADJACENT TRENCH. EXCAVATED MATERIAL MAY NOT REMAIN ON SUBGRADE.
7. PROVIDE A SMOOTH, EVEN SUBGRADE AFTER REMOVAL OF THE TRENCH MATERIAL. SUBGRADE TO BE COMPACTED TO 95%. LEAVE NO LOOSE MATERIAL ON THE SUBGRADE.
8. EXCAVATION BELOW INVERT GRADE MUST BE ESTABLISHED TO A DEPTH SO AS TO PROVIDE FOR SPECIFIED PLACEMENT OF PEA GRAVEL BEDDING AT BOTTOM OF PIPE ELEVATION PRIOR TO LAYING THE PERFORATED PIPE.
9. NO FOREIGN MATERIAL WILL BE PERMITTED INSIDE, ALONGSIDE, UNDER, OR ON TOP OF THE PERFORATED DRAIN PIPE.
10. THE BACKFILL FOR ALL PERFORATED PIPE SHALL BE CLEAN WASHED PEA GRAVEL. REFER TO THE SPECIFICATIONS FOR THE GRADATION REQUIREMENTS.
11. ALL TRENCHES TO HAVE BACKFILL MATERIAL "CROWNED" A MINIMUM OF 2" ABOVE SUBGRADE TO PROTECT FROM FOREIGN MATERIAL AND PROVIDE FOR EASE OF LOCATION IDENTIFICATION. CROWNS WITH FOREIGN MATERIAL CONTAMINATION SHALL BE REMOVED PRIOR TO PLACEMENT OF BASE AGGREGATE.
12. DURING PLACEMENT OF SPECIFIED TRENCH BACKFILL, PIPE MUST BE HELD IN PLACE TO PREVENT DISPLACEMENT AND PROVIDE FOR ACHIEVING SPECIFIED INVERT ELEVATION. DO NOT DAMAGE PIPE OR ALLOW PIPE TO BE DISPLACED BY PLACEMENT OF BACKFILL MATERIAL.
13. CAP THE ENDS OF ALL LATERAL RUNS. ALL OPEN ENDS DURING CONSTRUCTION ARE TO BE TEMPORARILY CAPPED OR PLUGGED.
14. CONNECTION OF LATERALS TO COLLECTOR DRAINS SHALL BE MADE WITH A COMBINATION REDUCING TEE AND REDUCING SADDLE TEE.
15. NO TRUCKS OR EQUIPMENT WILL BE ALLOWED TO DRIVE OVER THE TOP OF THE TRENCHES EXCEPT TRACK-EQUIPPED MACHINERY UTILIZED IN SPREADING BASE AGGREGATE. BACKFILLED TRENCHES ARE TO BE STAKED AND FLAGGED 3' ABOVE GRADE AT MAXIMUM 30' SPACING FOR IDENTITY.
16. COORDINATE SUBSURFACE DRAINAGE COLLECTOR LOCATION TO AVOID FENCE POST LOCATIONS.
17. COORDINATE SUBSURFACE DRAINAGE COLLECTOR LOCATION TO AVOID FIGHT POLE FOUNDATIONS.
18. ALL LATERAL-COLLECTOR CONNECTIONS SHALL BE A SIDE INLET CONNECTION FROM 6" MIN-24" MAX. SWITCH TO DROP CONNECTION 24" AND ABOVE.

NOTE LEGEND

1 (INDICATES GENERAL CONSTRUCTION NOTE)
3 (INDICATES SPECIFIC CONSTRUCTION KEYNOTE)

DRAINAGE LEGEND

E— · —	END CAP
— · — · —	4" PERF. CORR. POLY DRAIN TUBING
———	CPEP SUBSURFACE DRAINAGE COLLECTOR OR STORM DRAIN PIPE
S=0.33%	SLOPE
←	FLOW DIRECTION
IE 464.30	INVERT ELEVATION
CIE 463.00	COLLECTOR INVERT ELEVATION

File: F-0.1 Big Rock CURRENT 30x42.dwg Plotted by: CorneliuW Date: 12-Aug-16 2:40:20pm

REVISION	DATE

City of Duvall
Small Town. Real Life.

BIG ROCK PARK MULTI PURPOSE FIELD

DA HOGAN
119 1st Avenue South, Suite 110
Seattle, Washington 98104
p. 206.285.0400
f. 206.285.0480

STATE OF WASHINGTON
ROBERT S. HARDING
LANDSCAPE ARCHITECT

NORTH

0 20' 40'
SCALE: 1" = 20'

SEPA SET

DATE	8-12-16
SCALE	1"=30'
DRAWN	CPW
CHECKED	RSH

COPYRIGHT © 2016 D.A. HOGAN & ASSOCIATES

ATHLETIC FIELDS DRAINAGE PLAN

SHEET
F-1.3

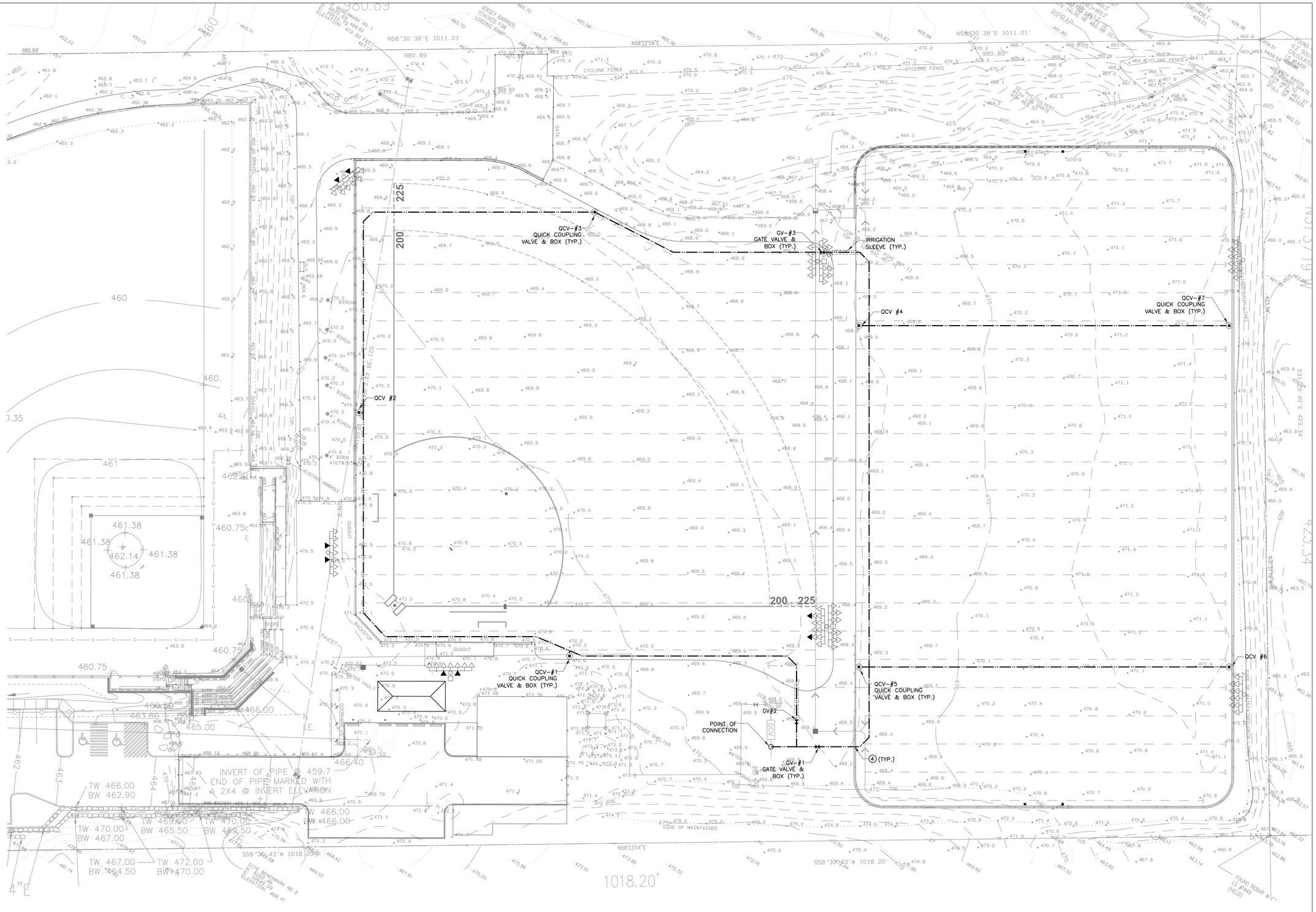

IRRIGATION NOTES

NOTE LEGEND

1. (INDICATES GENERAL CONSTRUCTION NOTE)
3. (INDICATES SPECIFIC CONSTRUCTION KEYNOTE)

1. COORDINATE QUICK COUPLING VALVE LOCATIONS TO CORRESPOND TO THE CONCRETE EDGE ANCHOR AT THE SYNTHETIC TURF FIELD.
2. THE CONTRACTOR SHALL LOCATE EXISTING ELECTRICAL AND COMMUNICATION CONDUCTORS IN THE FIELD AND VERIFY TO DEPTH WITH THE PROJECT LANDSCAPE ARCHITECT PRIOR TO TRENCHING FOR THE DRAINAGE AND WATER SYSTEMS.
3. COORDINATE IRRIGATION PIPING TO AVOID UNDERGROUND UTILITIES.
4. COORDINATE IRRIGATION PIPING AND FENCE POSTS TO AVOID CONFLICT.
5. COORDINATE IRRIGATION PIPING TO BE IN SAME TRENCH AS DRAINAGE LATERALS.
6. IRRIGATION SYSTEM LAYOUT: DUE TO THE SCALE OF THE DRAWINGS, THE CONTRACTOR SHALL BE AWARE THAT MINOR ADJUSTMENTS TO THE IRRIGATION SYSTEM MAY BE NECESSARY. FURTHERMORE THE IRRIGATION DESIGN IS DIAGRAMMATIC.

IRRIGATION LEGEND

	2" GATE VALVE AND BOX	M AND H 4067-07 OR APPROVED EQUAL
	1" QUICK COUPLER VALVE AND BOX	RAINBIRD 44LRC W/ LOCKING VINYL LID
	SCH 40 PVC IRRIGATION MAIN LINE	3"
	IRRIGATION SLEEVE	

REVISION	DATE

City of Duvall
Small Town. Real Life.

BIG ROCK PARK
MULTI PURPOSE
FIELD

DA HOGAN
119 1st Avenue South, Suite 110
Seattle, Washington 98104
p. 206.285.0400
f. 206.285.0480

STATE OF WASHINGTON
HUMBERT S. HOGAN
EXP. JANUARY NO. 6 19
LANDSCAPE ARCHITECT

NORTH

0 20' 40'
SCALE: 1" = 20'

SEPA SET

DATE	8-12-16
SCALE	1"=20'
DRAWN	CPW
CHECKED	RSH

COPYRIGHT © 2016 D.A. HOGAN & ASSOCIATES

ATHLETIC FIELDS
WASHWATER
PLAN

SHEET

F-1.4

File: F-0.1 Big Rock CURRENT 30x42.dwg Plotted by: CorneliaW Date: 12-Aug-16 2:42:36pm

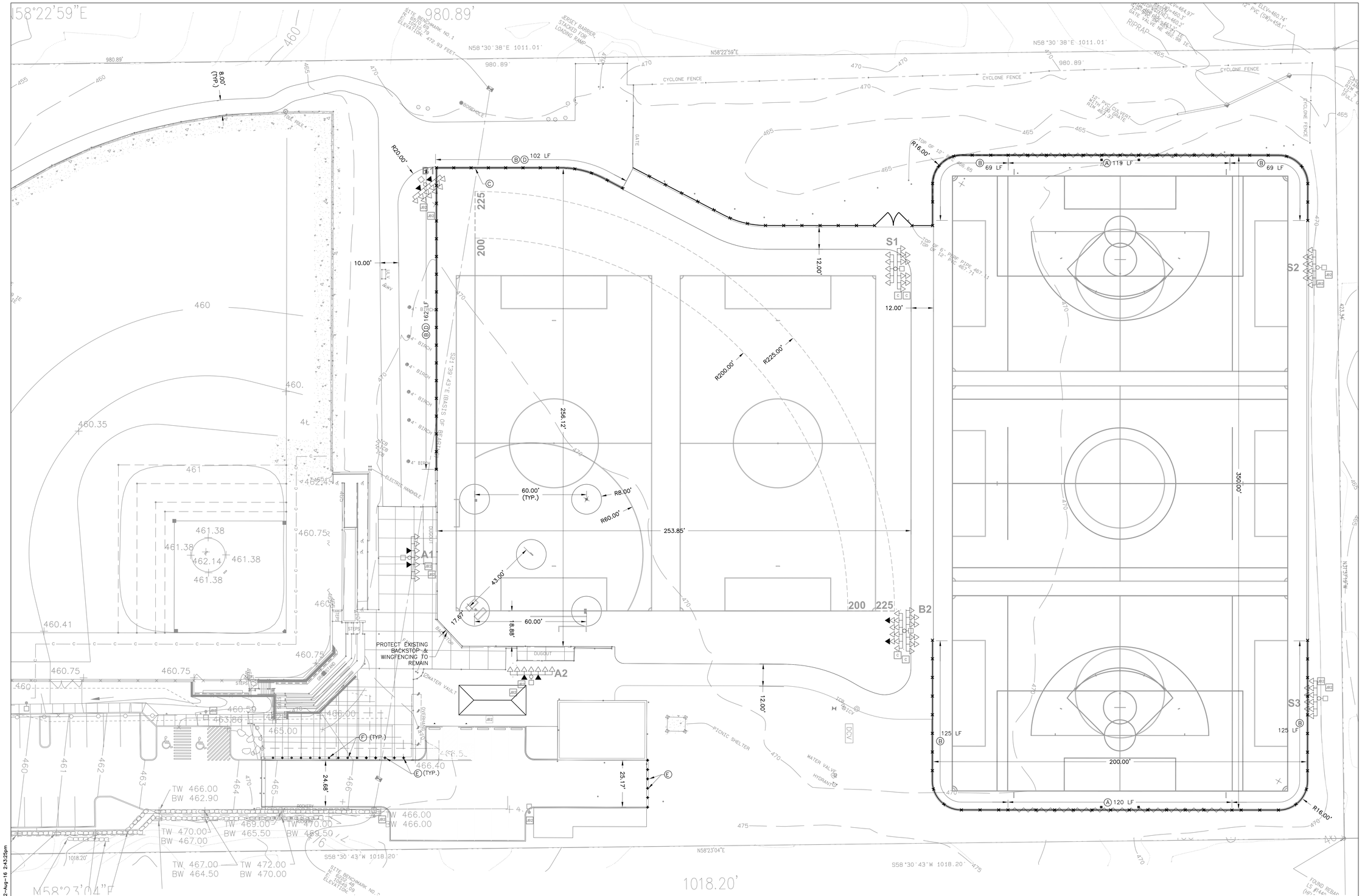

FENCE TYPE KEY

- (A) 21' OVERALL; 6' HEIGHT CHAIN LINK FENCE; 2" MESH X9 GAUGE, TOP, MIDDLE, BOTTOM RAIL, 15' X2"SQ. NYLON NETTING ABOVE
- (B) 6' HEIGHT CHAIN LINK FENCE; 2" MESH X9 GAUGE, TOP, MIDDLE, BOTTOM RAIL AND TENSION WIRE
- (C) FOUL POLE
- (D) FENCE CAP
- (E) REMOVABLE BOLLARD (9 TOTAL, 5 FEET O.C.)
- (F) FIXED BOLLARD (12 TOTAL, 5 FEET O.C.)

FENCING & LAYOUT CONTROL NOTES

1. END FENCE. MEET AND MATCH EXISTING FENCE TO PROVIDE SECURITY ENCLOSURE
2. FENCE ADJACENT TO PROPERTY LINE TO BE LOCATED 12" INSIDE PROPERTY LINE
3. DIMENSIONS INDICATED ARE TYPICALLY TO FACE OF CURB/WALL OR EDGE OF PAVEMENT.
4. CONTRACTOR WILL BE FURNISHED AUTOCAD FILES USED FOR DESIGN FOR USE DURING CONSTRUCTION.
5. EXACT PATHWAY LAYOUT TO BE FIELD CONFIRMED BY LANDSCAPE ARCHITECT.

NOTE LEGEND

1. (INDICATES GENERAL CONSTRUCTION NOTE)
3. (INDICATES SPECIFIC CONSTRUCTION KEYNOTE)

FENCING LEGEND

- CHAINLINK FENCE AND CONCRETE CURB
- CHAINLINK FENCE
- CHAINLINK FENCING AND NETTING
- 6' CYCLONE FENCE — EXISTING FENCE TO REMAIN
- (B) — FENCE TYPE AND LIMIT
- CONCRETE CURBING
- CONCRETE CURB WALL

REVISION	DATE

City of Duvall
Small Town. Real Life.

BIG ROCK PARK MULTI PURPOSE FIELD

DA HOGAN
119 1st Avenue South, Suite 110
Seattle, Washington 98104
p. 206.285.0400
f. 206.285.0480

STATE OF WASHINGTON
ROBERT S. HARDING
EXP. 12/31/16 LANDSCAPE ARCHITECT

NORTH

0 20' 40'
SCALE: 1" = 20'

SEPA SET

DATE	8-12-16
SCALE	1"=20'
DRAWN	CPW
CHECKED	RSH

COPYRIGHT © 2016 D.A. HOGAN & ASSOCIATES

ATHLETIC FIELDS FENCING & DIMENSIONING PLAN

SHEET

F-1.5

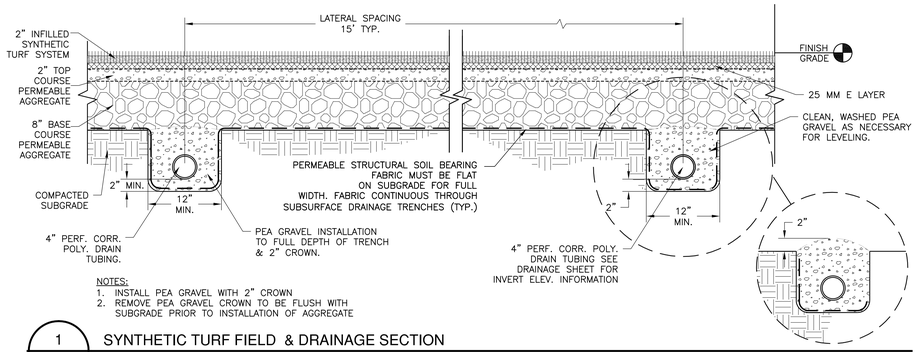

NOTES:
1. INSTALL PEA GRAVEL WITH 2" CROWN
2. REMOVE PEA GRAVEL CROWN TO BE FLUSH WITH SUBGRADE PRIOR TO INSTALLATION OF AGGREGATE

1 / F-2.1 SYNTHETIC TURF FIELD & DRAINAGE SECTION

NOT TO SCALE

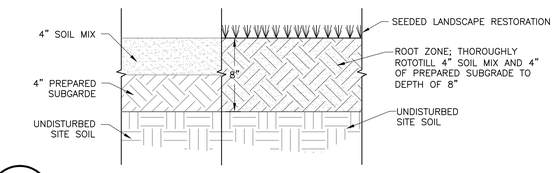

2 / F-2.1 SITE RESTORATION SOIL BASED

NOT TO SCALE

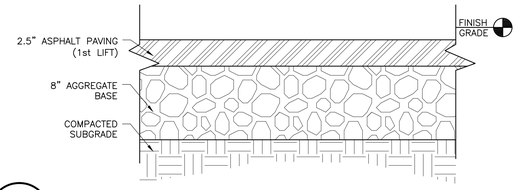

3 / F-2.1 ASPHALT PAVING SECTION

NOT TO SCALE

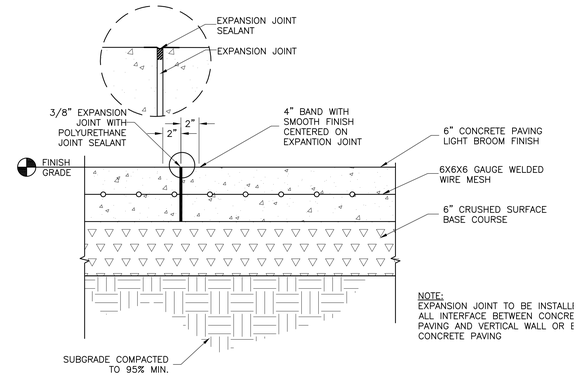

A: CONCRETE PAVING AT EXPANSION JOINT

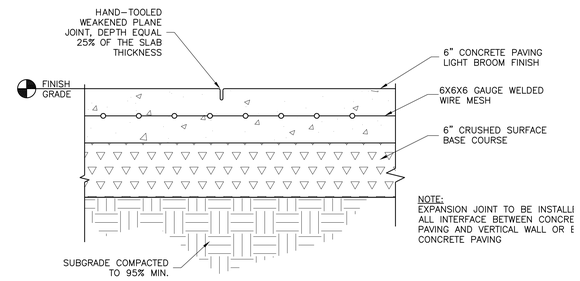

B: CONCRETE PAVING WITH WEAKENED PLANE JOINT

4 / F-2.1 CONCRETE PAVING

NOT TO SCALE

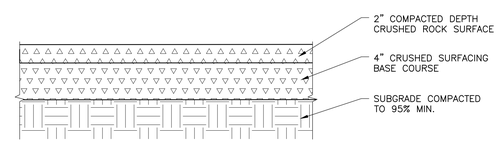

5 / F-2.1 CRUSHED ROCK SURFACING

NOT TO SCALE

REVISION	DATE

City of Duvall
Small Town. Real Life.

BIG ROCK PARK MULTI PURPOSE FIELD

DA HOGAN
119 1st Avenue South, Suite 110
Seattle, Washington 98104
p. 206.285.0400
f. 206.285.0480

STATE OF WASHINGTON
ROBERT S. HARDING
LANDSCAPE ARCHITECT

SEPA SET

DATE	8-12-16
SCALE	NTS
DRAWN	CPW/DMD
CHECKED	RSH

COPYRIGHT © 2016 D.A. HOGAN & ASSOCIATES

SITE SECTIONS & DETAILS

SHEET

F-2.1

File: F-2.1 Site Sections & Details.dwg Plotted by: CorneliuW Date: 12-Aug-16 1:11:25pm

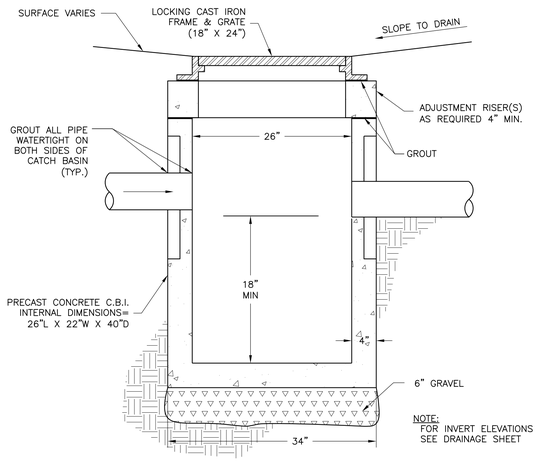

1 / F-2.2 TYPE 1 CATCH BASIN

NOT TO SCALE

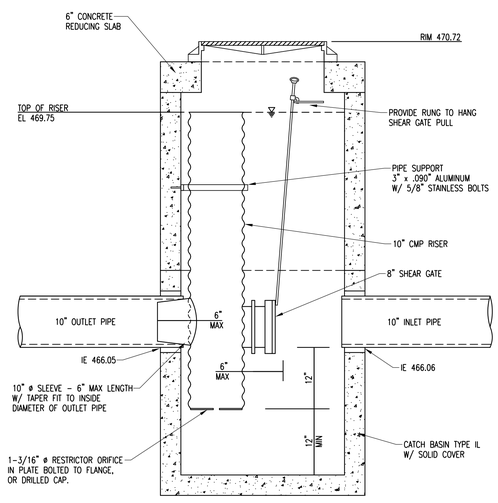

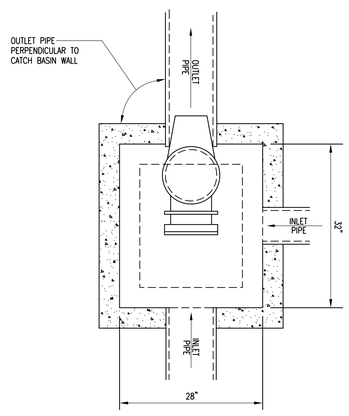

PLAN VIEW

CB TYPE 1-L

2 / F-2.2 FLOW CONTROL STRCUTURE

NOT TO SCALE

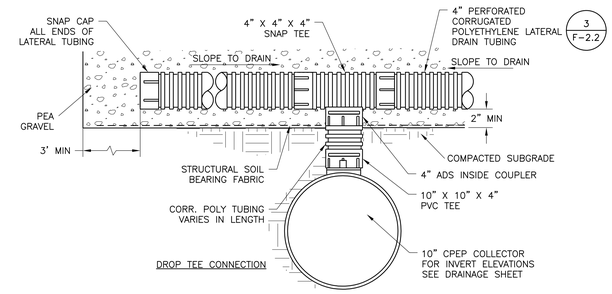

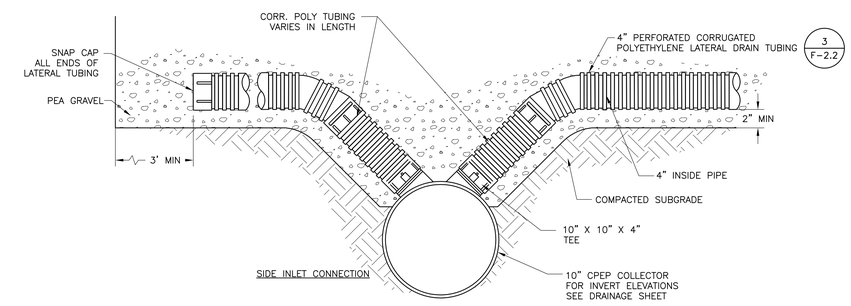

4 / F-2.2 SUBSURFACE DRAINAGE CONNECTION

NOT TO SCALE

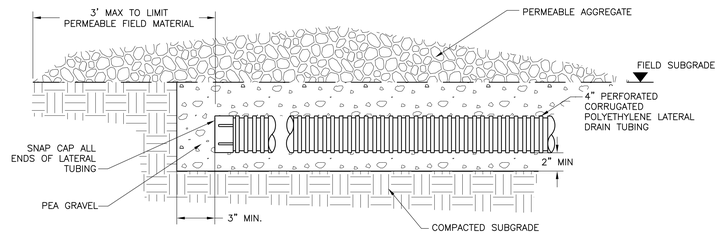

3 / F-2.2 SUBSURFACE DRAINAGE LATERAL

NOT TO SCALE

REVISION	DATE

City of Duvall
Small Town. Real Life.

BIG ROCK PARK MULTI PURPOSE FIELD

DA HOGAN
119 1st Avenue South, Suite 110
Seattle, Washington 98104
p. 206.285.0400
f. 206.285.0480

STATE OF WASHINGTON
ROBERT S. HAMILTON
EXP. 12/31/17 NO. 1 R
LANDSCAPE ARCHITECT

SEPA SET	
DATE	8-12-16
SCALE	NTS
DRAWN	CPW/DMD
CHECKED	RSH

COPYRIGHT © 2016 D.A. HOGAN & ASSOCIATES

DRAINAGE DETAILS

SHEET

F-2.2

File: F-2.2 Drainage Details.dwg Plotted by: CorneliaW Date: 12-Aug-16 1:12:36pm

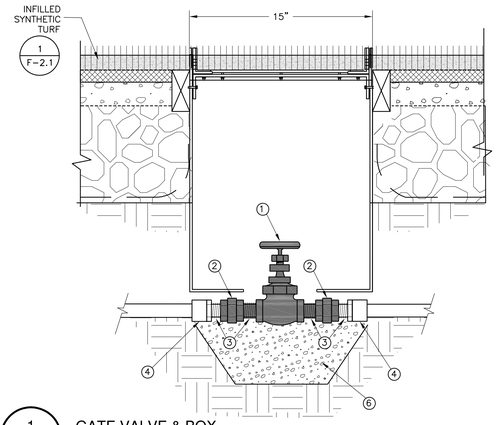

NOTES:

1. 3–4" BRASS GATE VALVE, THREADED INLET/OUTLET, SIZED PER THE DRAWINGS OR ASSOCIATED INLET–SIDE PIPE
2. BRASS UNION
3. BRASS NIPPLE
4. SCHEDULE 40– PVC BUSHING, SxT
5. TURF COOLBOX BOX,
6. MIN. 6" DEPTH 5/8" WASHED PEA GRAVEL

1 / F-2.3 GATE VALVE & BOX

NOT TO SCALE

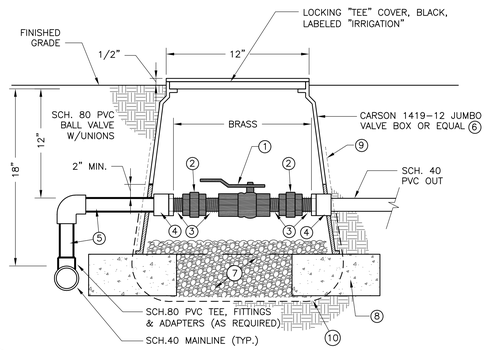

NOTES:

1. BRASS BALL VALVE, THREADED INLET/OUTLET, SIZED PER THE DRAWINGS OR ASSOCIATED INLET–SIDE PIPE
2. BRASS UNION
3. BRASS NIPPLE
4. SCHEDULE 80– PVC BUSHING, SxT
5. MIN. 12" HORIZONTAL & VERTICAL OFFSET FROM MAINLINE
6. PLASTIC VALVE BOX, MIN. 12"ø
7. MIN. 6" DEPTH 5/8" WASHED PEA GRAVEL
8. PRE–CAST CONCRETE BRICK UNDER EACH CORNER OF THE VALVE BOX
9. 30 MIL PVC LINER OR EQUAL; TAPE TO VALVE BOX, CUT MINIMUM OPENING FOR PIPE.
10. 4 OZ/SY NON–WOVEN GEOTEXTILE

2 / F-2.3 BALL VALVE IN LANDSCAPE

NOT TO SCALE

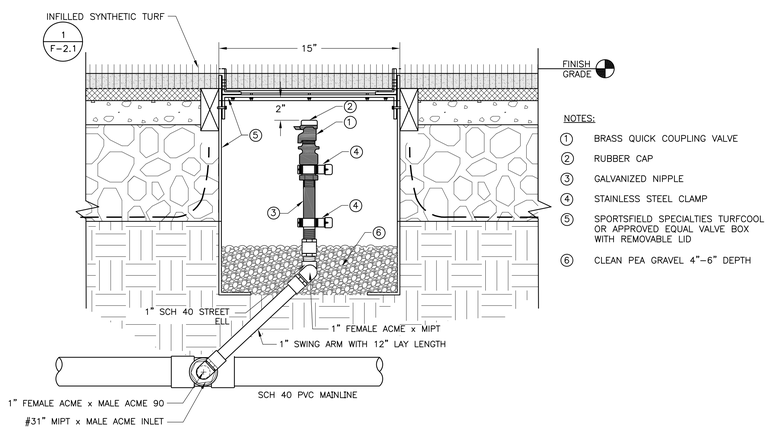

NOTES:

1. BRASS QUICK COUPLING VALVE
2. RUBBER CAP
3. GALVANIZED NIPPLE
4. STAINLESS STEEL CLAMP
5. SPORTSFIELD SPECIALTIES TURFCOOL OR APPROVED EQUAL VALVE BOX WITH REMOVABLE LID
6. CLEAN PEA GRAVEL 4"–6" DEPTH

3 / F-2.3 QUICK COUPLER VALVE & BOX

NOT TO SCALE

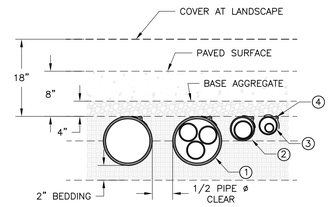

SLEEVING

NOTES:

1. 12" SLEEVE CONTAINS UP TO (3) 4"ø PIPE
2. 6" SLEEVE CONTAINS (1) 4"ø PIPE
3. 4" SLEEVE CONTAINS (1) 2"ø PIPE
4. ALL SLEEVES TO INCORPORATE A 14G TRACER WIRE TAPED TO THE UPPER 1/3

5. HDPE SLEEVING NOTES:

A. HDPE SLEEVING IS INCORPORATED FOR SWEEPING VERTICAL AND HORIZONTAL CURVATURE. VERIFY WITH THE MANUFACTURER THE MAXIMUM BENDING RADIUS OF EMPTY CONDUIT AND LAY OUT VERTICAL AND HORIZONTAL ALIGNMENT WITH NO MORE THAN 75% OF THE RATED BEND.

B. ALL HDPE SLEEVE SHALL BE WITHOUT JOINTS FOR THE ENTIRE LENGTH.

C. HDPE SLEEVING SHALL BE INSPECTED FOR KINKS PRIOR TO BACKFILL.

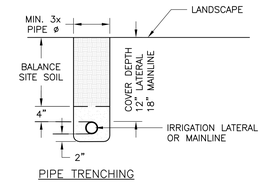

PIPE TRENCHING

4 / F-2.3 IRRIGATION PIPE TRENCHING & SLEEVING

NOT TO SCALE

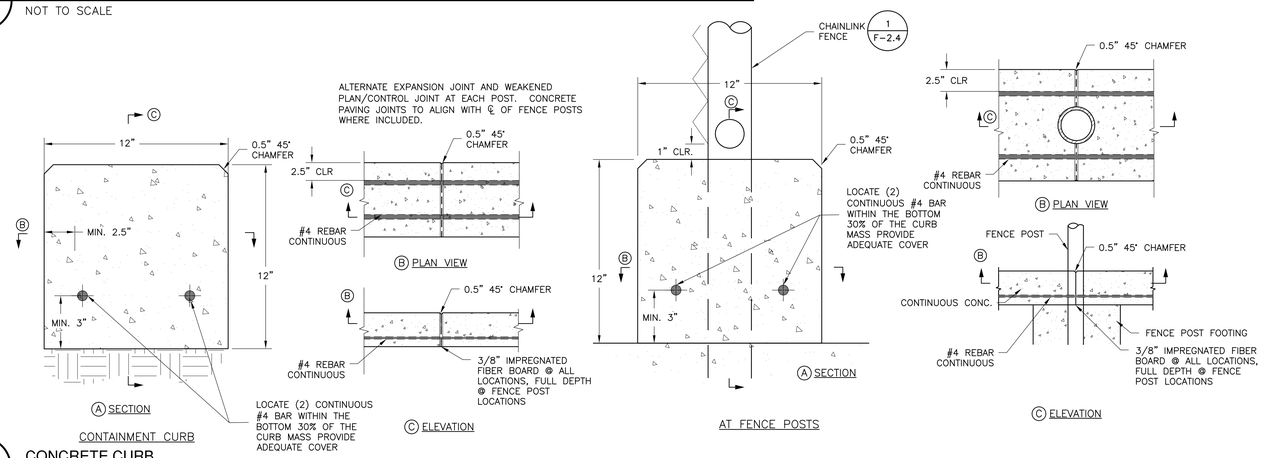

5 / F-2.3 CONCRETE CURB

NOT TO SCALE

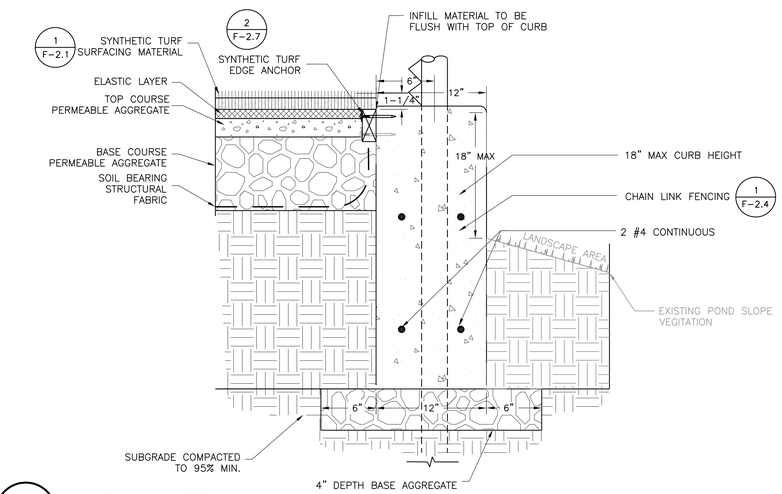

6 / F-2.3 NORTH CONCRETE CURB WALL

NOT TO SCALE

REVISION	DATE

City of Duvall
Small Town. Real Life.

BIG ROCK PARK MULTI PURPOSE FIELD

DA HOGAN
119 1st Avenue South, Suite 110
Seattle, Washington 98104
p. 206.285.0400
f. 206.285.0480

STATE OF WASHINGTON
ROBERT S. HARDING
LICENSED LANDSCAPE ARCHITECT

SEPA SET	
DATE	8-12-16
SCALE	NTS
DRAWN	CPW/DMD
CHECKED	RSH

COPYRIGHT © 2016 D.A. HOGAN & ASSOCIATES

WASHWATER & CONCRETE DETAILS

SHEET

F-2.3

File: F-2.3 Washwater & Concrete Details.dwg Plotted by: CorneliaW Date: 12-Aug-16 1:13:31pm

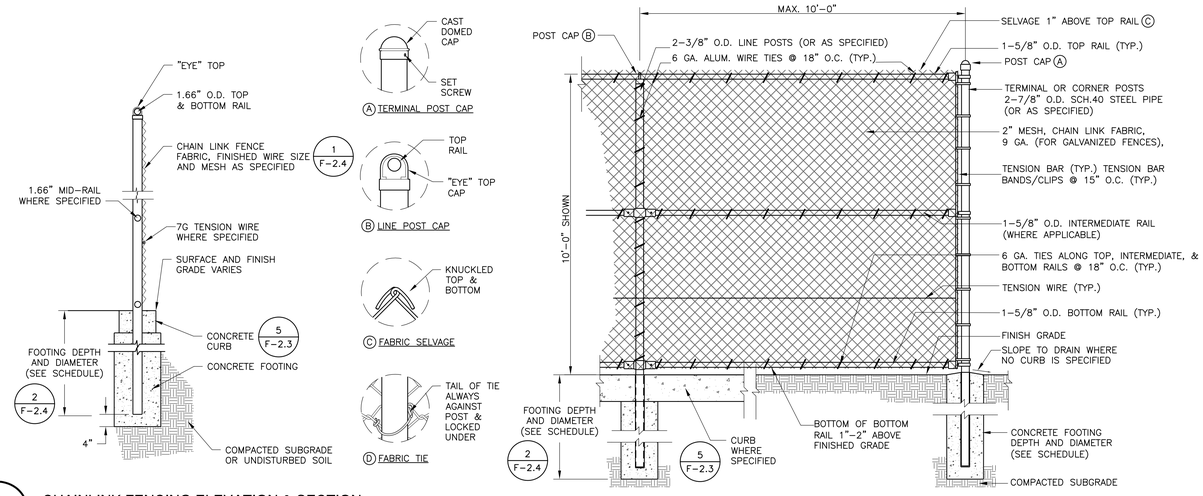

1 / F-2.4 CHAINLINK FENCING ELEVATION & SECTION

NOT TO SCALE

FENCING TYPE	6' HIGH WITH 15' NETTING	6' HIGH FENCING
CORNER POST	6.625" OD	2.875" OD
TERMINAL POST	6.625" OD	2.875" OD
LINE POST	6.625" OD	2.375" OD
FOOTING DEPTH	7'-0"	36"
FOOTING DIAMETER	24"	12"
TOP RAIL HT.	6'	6'
INTERMEDIATE RAIL HTS.	3'	3'
BOTTOM RAIL HT	1"	1"
TENSION WIRE HTS.	1.5'	1.5'

FENCING NOTES:

1. ALL FENCING FABRIC SHALL BE BLACK VINYL COATING NO. 9 GAUGE FINISHED STEEL WIRES.
2. ALL POSTS, RAILS, BRACES, POST TOPS, STRETCHER BARS, BANDS, ETC. SHALL BE BLACK VINYL COATED.
3. TENSION WIRES AND WIRE TIES SHALL BE BE BLACK VINYL COATED.
4. MAXIMUM POST SPACING: 10' ON CENTER.

2 / F-2.4 CHAINLINK SCHEDULE

NOT TO SCALE

NOTES:
1. INSTALL TERMINAL POST MIN. 10' O.C.
2. AT LIMIT OF WALL, INSTALL TERMINAL POST 2" CLEAR IN CONCRETE CURB AT BOTTOM OF WALL.

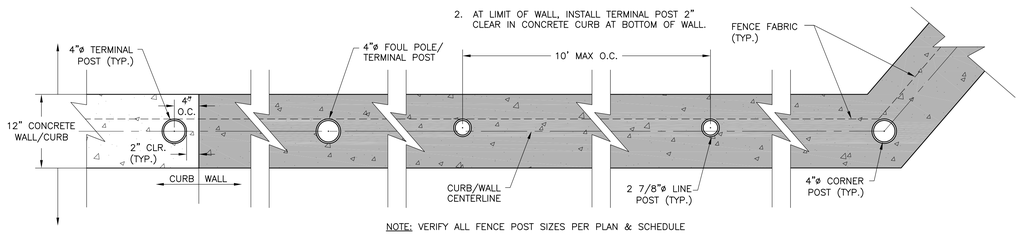

NOTE: VERIFY ALL FENCE POST SIZES PER PLAN & SCHEDULE

3 / F-2.4 TYPICAL FENCE POST LAYOUT

NOT TO SCALE

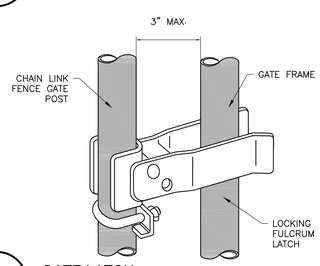

4 / F-2.4 GATE LATCH

NOT TO SCALE

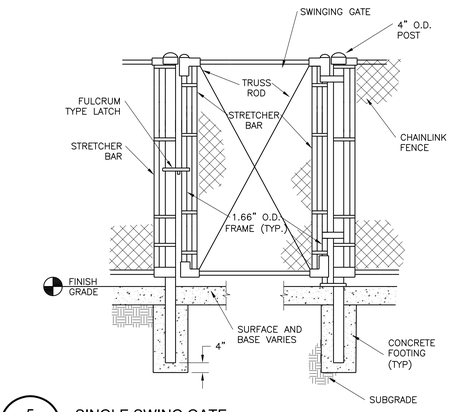

5 / F-2.4 SINGLE SWING GATE

NOT TO SCALE

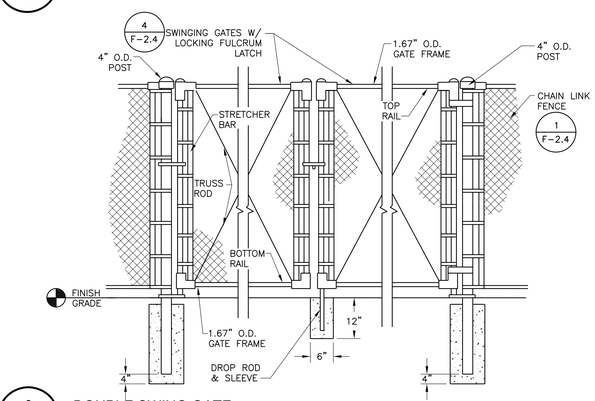

6 / F-2.4 DOUBLE SWING GATE

NOT TO SCALE

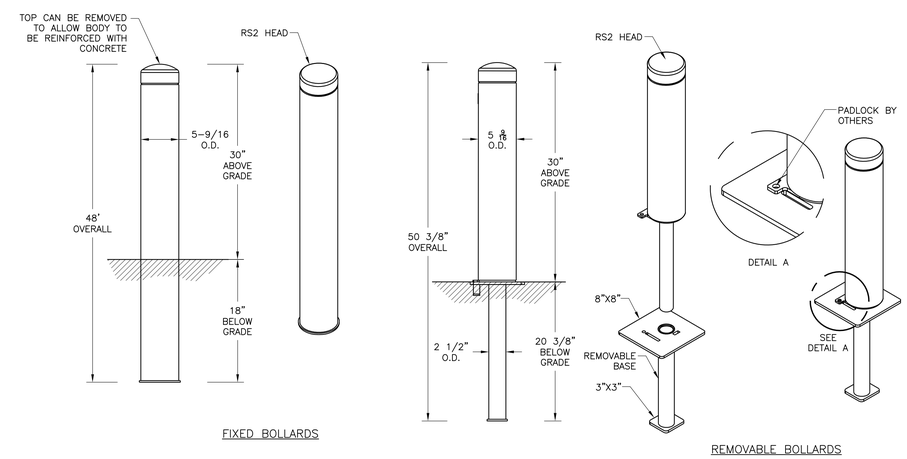

7 / F-2.4 BOLLARDS

NOT TO SCALE

File: F-2.4 Fencing Details.dwg Plotted by: CorneliaW Date: 12-Aug-16 3:50:51pm

REVISION	DATE

City of Duvall
Small Town. Real Life.

BIG ROCK PARK MULTI PURPOSE FIELD

DA HOGAN
119 1st Avenue South, Suite 110
Seattle, Washington 98104
p. 206.285.0400
f. 206.285.0480

STATE OF WASHINGTON
ROBERT S. HARDING
EXP. 12/31/17 NO. 6-18
LANDSCAPE ARCHITECT

SEPA SET

DATE	8-12-16
SCALE	NTS
DRAWN	CPW/DMD
CHECKED	RSH

COPYRIGHT © 2016 D.A. HOGAN & ASSOCIATES

FENCING DETAILS

SHEET

F-2.4

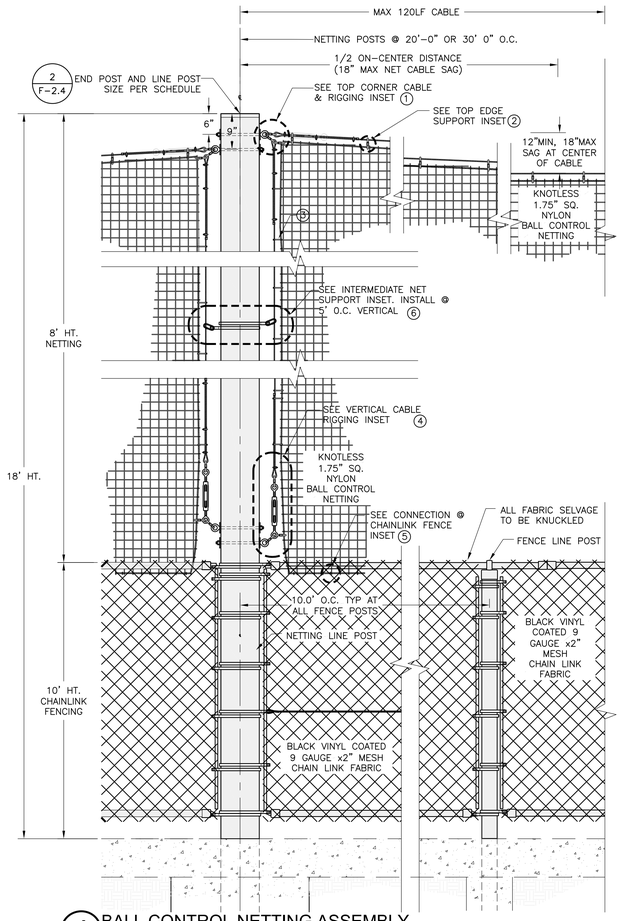

A BALL CONTROL NETTING ASSEMBLY
NOT TO SCALE

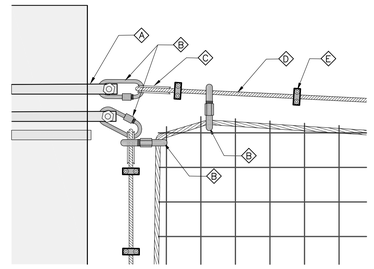

B TOP CORNER CABLE & RIGGING
NOT TO SCALE

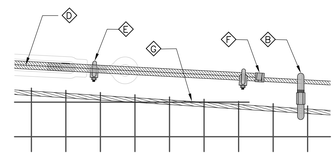

C TOP EDGE SUPPORT
NOT TO SCALE

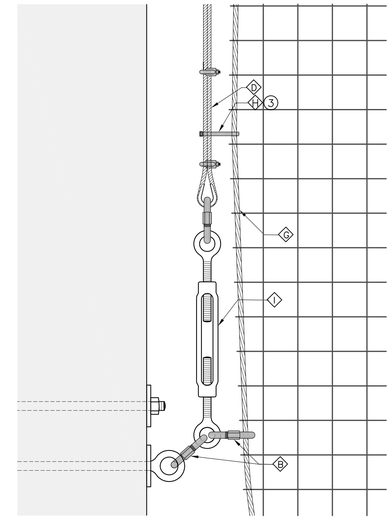

E VERTICAL CABLE RIGGING
NOT TO SCALE

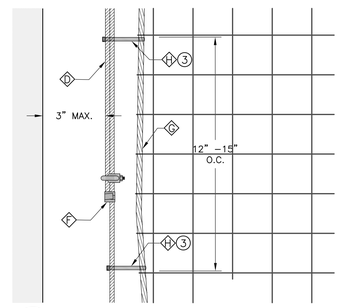

D VERTICAL EDGE SUPPORT
NOT TO SCALE

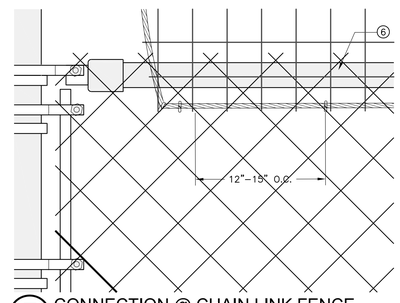

F CONNECTION @ CHAIN LINK FENCE
NOT TO SCALE

CONNECTION NOTES:

1. TOP CORNER; EYE BOLT SIZED TO ACCOMMODATE BOTH THE LIMIT ON GAP BETWEEN THE POLE AND THE VERTICAL CABLE AND THE CONNECTING LINKS FOR BOTH THE VERTICAL AND HORIZONTAL SUPPORT CABLES. PROVIDE (1) TURNBUCKLE AT EACH END OF EACH CABLE.
2. TOP EDGE OF BALL CONTROL NET ASSEMBLY HELD TO THE SUPPORT CABLE WITH GALVANIZED OR STAINLESS STEEL OR ALUMINUM THREADED LINK, SNAP LINK, OR CARABINER-TYPE CONNECTOR WITH APPROVED BLACK FINISH. SIZE TO ALLOW SPACING NO LESS THAN 12" O.C. BUT NO GREATER THAN 21" O.C. TO REDUCE ROPE BORDER SAG BETWEEN CONNECTIONS.
3. LOOSE VERTICAL CONNECTIONS TO BE GALVANIZED OR VIA POLYESTER SNAP-CLIP SPACED 12"-15" O.C.
4. BOTTOM VERTICAL SUPPORT CABLE CONNECTION TO INCLUDE A TURNBUCKLE FOR ADJUSTMENT.
5. BALL CONTROL NET ASSEMBLY BOTTOM EDGE CONNECTION TO BE VIA NYLON ZIP TIE 12"-15" O.C. DIRECTLY TO CHAIN LINK FABRIC BELOW THE TOP RAIL. CLF FABRIC TO BE INSTALLED ON THE FIELD SIDE OF THE FRAMEWORK. BALL CONTROL NET TO BE SECURED TO THE FIELD SIDE OF THE FINISHED CHAIN LINK FENCE ASSEMBLY BELOW THE TOP RAIL.
6. MAIN VERTICAL SUPPORT CABLE CONNECTION TO POLE AT 12' - 15' O.C., MATCH TOP TAB OR FLANGE A

HARDWARE NOTES:

- A: EYE BOLT LOCATED NEAR TOP OF POLE ASSEMBLY. PLACEMENT TO ACCOUNT FOR POTENTIAL OF UP TO 18" OF SAG IN THE TOP SUPPORT CABLE AT 70LBF TENSION WITH THE NETTING IN PLACE. MAX SPACING BETWEEN HORIZONTAL CABLE ENDS 120LF
- B: GALVANIZED OR STAINLESS STEEL THREADED MASTER LINK CARABINER OR APPROVED EQUAL, 1/2" x1-1.5" PROVIDE HORIZONTAL HARDWARE WITH APPROVED BLACK FINISH.
- C: GALVANIZED STEEL THIMBLE SIZED FOR THE SPECIFIED WIRE ROPE; USE AT ALL CABLE TERMINATIONS.
- D: GALVANIZED STEEL WIRE ROPE, 5/16"ø.
- E: WIRE ROPE CONNECTOR, U-BOLT TYPE. MIN. TWO PER CONNECTION OR AS NEEDED.
- F: VINYL TAPE TRIPLE WRAP ALL CUT WIRE ENDS.
- G: PRE-FABRICATED BALL CONTROL NET ASSEMBLY TO BE PROVIDED WITH A CONTINUOUS 5/8 "ø NYLON ROPE BORDER.
- H: BLACK VINYL OR POLYESTER SNAP-CLIP FOR VERTICAL CABLE-TO-ROPE CONNECTIONS ONLY
- I: GALVANIZED OR STAINLESS STEEL TURNBUCKLE, 1/2 " x 12".

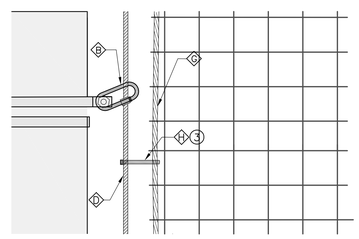

G INTERMEDIATE NET SUPPORT
NOT TO SCALE

1 / F-2.5 BALL CONTROL & CABLE DETAIL
NOT TO SCALE

REVISION	DATE

City of Duvall
Small Town. Real Life.

BIG ROCK PARK MULTI PURPOSE FIELD

DA HOGAN
119 1st Avenue South, Suite 110
Seattle, Washington 98104
p. 206.285.0400
f. 206.285.0480

STATE OF WASHINGTON
HERBERT S. HARDTKE
REGISTERED
LANDSCAPE ARCHITECT

SEPA SET

DATE	8-12-16
SCALE	NTS
DRAWN	CPW/DMD
CHECKED	RSH

COPYRIGHT © 2016 D.A. HOGAN & ASSOCIATES

FENCING & NETTING DETAILS

SHEET
F-2.5

File: F-2.5 Fencing & Netting Details.dwg Plotted by: CorneliuW Date: 12-Aug-16 3:51:53pm

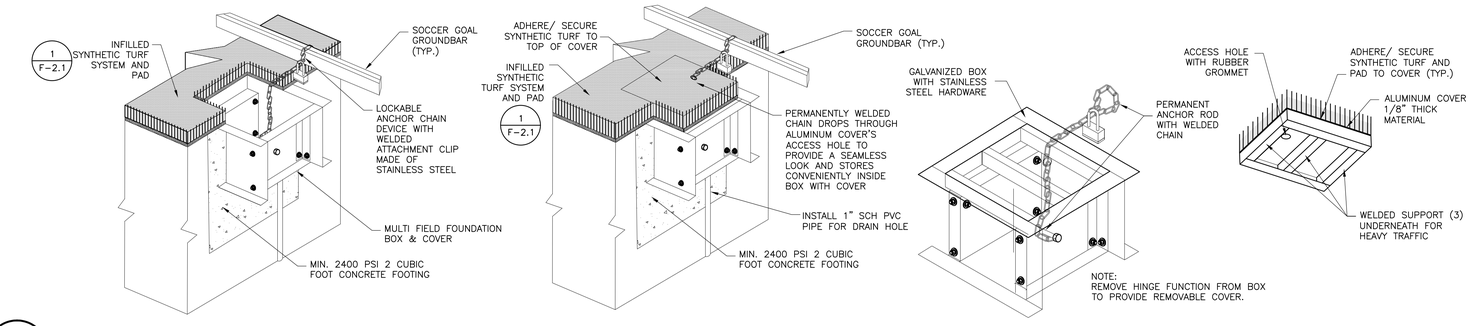

1 / F-2.6 SOCCER GOAL ANCHOR

NOT TO SCALE

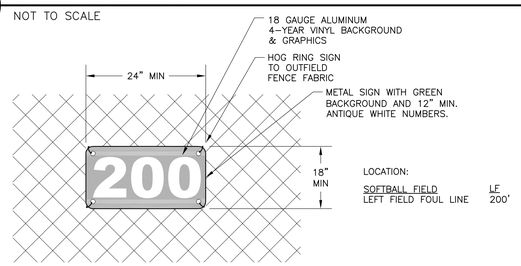

2 / F-2.6 OUFIELD SIGNS

NOT TO SCALE

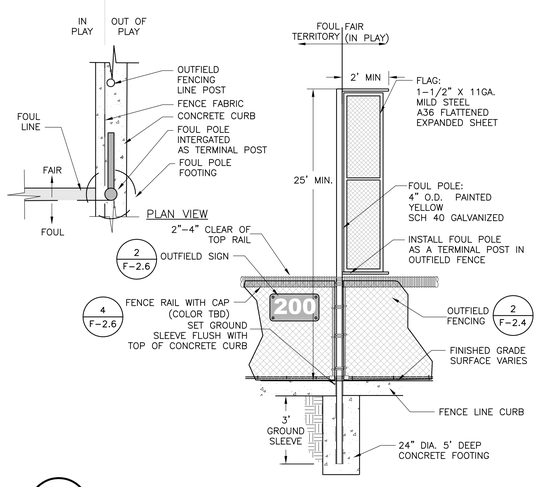

3 / F-2.6 FOUL POLE

NOT TO SCALE

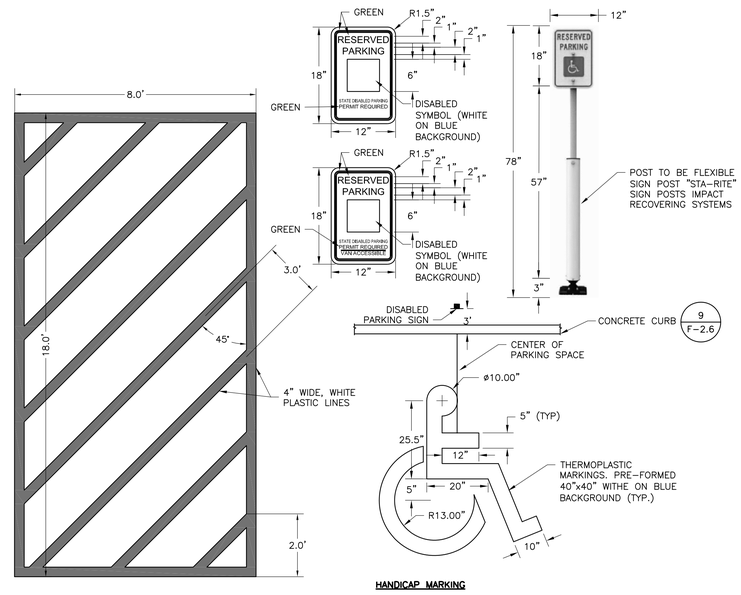

5 / F-2.6 MISCELLANIOUS PARKING LOT MARKINGS

NOT TO SCALE

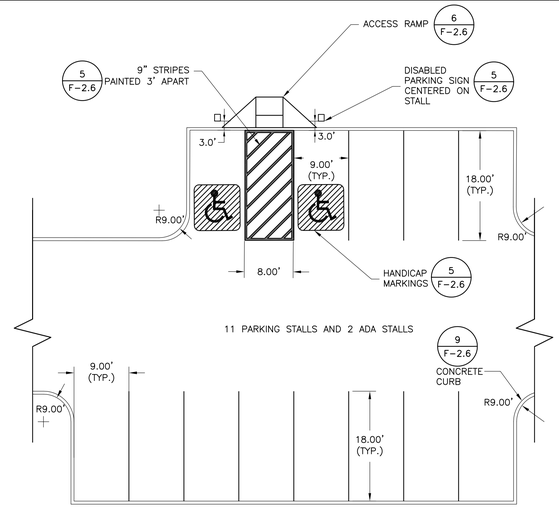

7 / F-2.6 PARKING LOT STRIPING

NOT TO SCALE

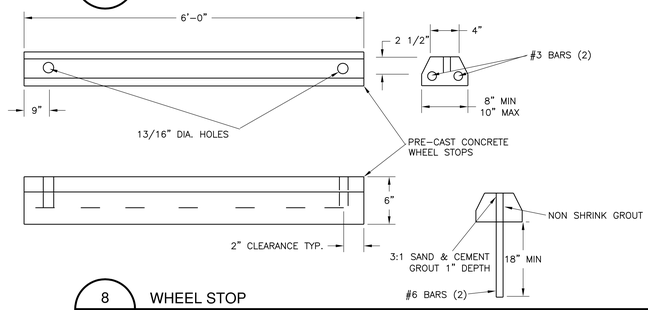

8 / F-2.6 WHEEL STOP

NOT TO SCALE

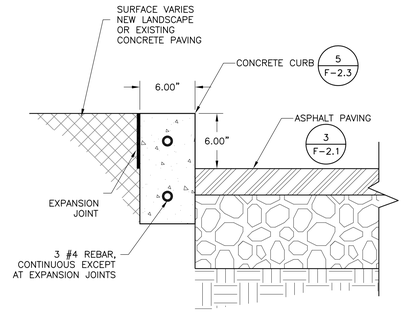

9 / F-2.6 PARKING LOT CONCRETE CURB

NOT TO SCALE

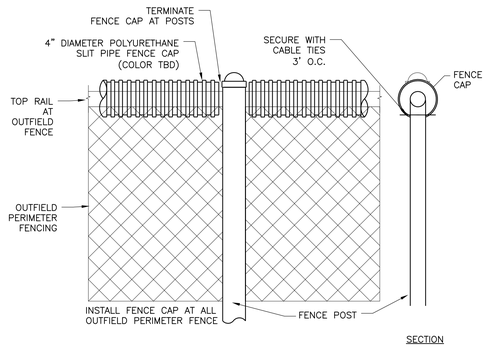

4 / F-2.6 FENCE CAP

NOT TO SCALE

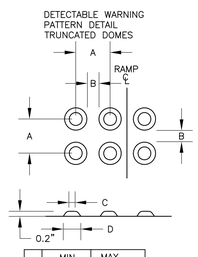

	MIN.	MAX.
A	1.6 "	2.4 "
B	0.65 "	1.5 "
C	50% TO 65% OF D	
D	0.9 "	1.4 "

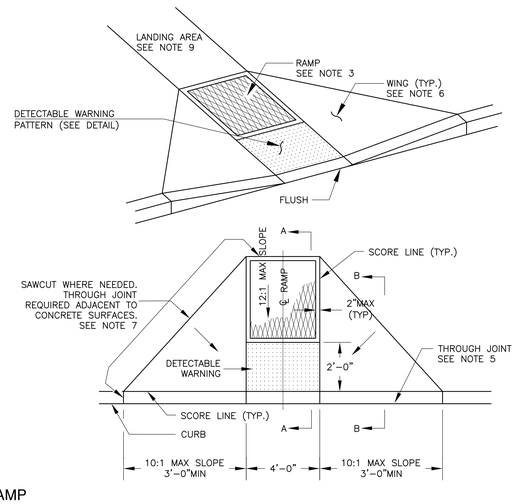

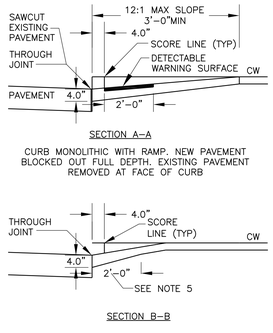

NOTES:

1. MIN DISTANCE BETWEEN ADJACENT CURB RAMPS SHALL BE 3'-0".
2. CURB RAMPS SHALL BE ISOLATED FROM ALL OTHER CONCRETE BY THROUGH JOINTS.
3. RAMPS SHALL HAVE A COARSE TEXTURED SURFACE OBTAINED WITH A 3/4" 9-11 FLATTENED EXPANDED METAL MESH BEING PRESSED INTO THE STILL FRESH CONCRETE. THE LONG AXIS OF THE DIAMOND PATTERN SHALL BE ALIGNED WITH THE SLOPE OF THE RAMP.
4. ADDITIONAL SIDEWALK PAVING MAY BE NECESSARY AT THE BACK OF SIDEWALK TO ACCOMODATE ACCESS TO THE RAMP. A MINIMUM 2% MAX. GRADE LANDING SHALL BE PROVIDED AT THE TOP OF RAMP 4'-0"x5'-0".
5. THE SIDEWALK THICKENED EDGE SHALL BE CONTINUED THROUGH BOTH WINGS.
6. THE WINGS SHALL HAVE A SLIGHTLY BRUSHED FINISH PARALLEL TO THE CURB.
7. MIN LATERAL CLEARANCE FROM INLETS, POLES, HYDRANTS AND OTHER ABOVE GROUND OBSTACLES SHALL BE 1'-0" FROM THE SCORED OR DETECTABLE WARNING PORTION OF THE CURB RAMP.
8. INLETS SHALL BE SO LOCATED THAT GUTTER FLOW DOES NOT FLOW PAST THE CURB RAMP.
9. DECTECTABLE WARNING SURFACE SHALL BE WHITE AND SHALL BE LOCATED WITHIN 6 TO 8 INCHES OF THE CURB FACE.

6 / F-2.6 CONCRETE SIDEWALK RAMP

NOT TO SCALE

REVISION	DATE

City of Duvall
Small Town. Real Life.

BIG ROCK PARK MULTI PURPOSE FIELD

DA HOGAN
119 1st Avenue South, Suite 110
Seattle, Washington 98104
p. 206.285.0400
f. 206.285.0480

STATE OF WASHINGTON ROBERT S. HARDTKE ESTD. 1988 LICENSE NO. 618 LANDSCAPE ARCHITECT

SEPA SET	
DATE	8-12-16
SCALE	NTS
DRAWN	CPW/DMD
CHECKED	RSH

COPYRIGHT © 2016 D.A. HOGAN & ASSOCIATES

SITE DETAILS

SHEET

F-2.6

File: F-2.6 Site Details.dwg Plotted by: CorneliusW Date: 12-Aug-16 1:28:03pm

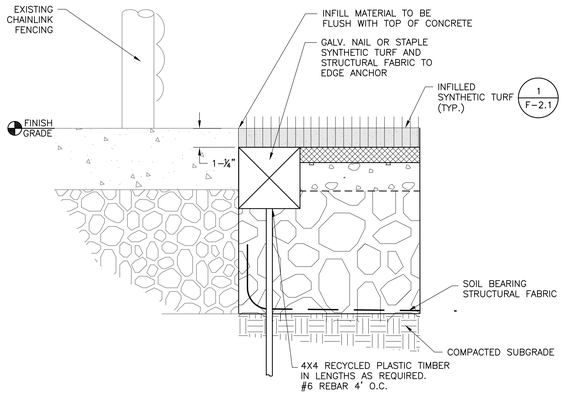

1 / F-2.7 SYNTHETIC TURF EDGE ANCHOR AT EXISTING CONCRETE PAVING

NOT TO SCALE

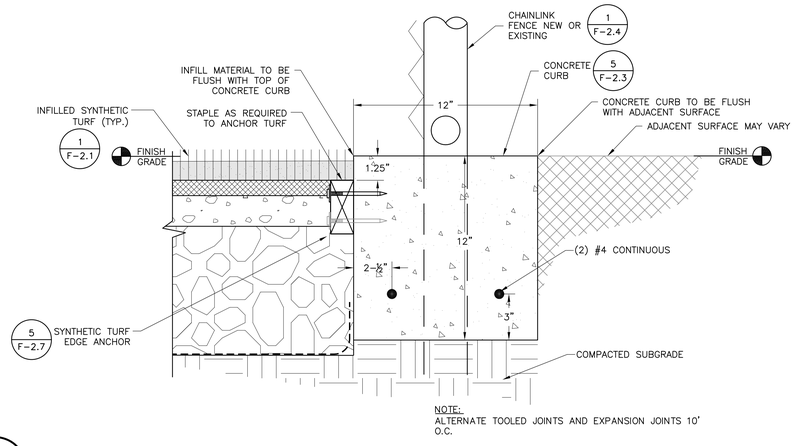

NOTE:
ALTERNATE TOOLED JOINTS AND EXPANSION JOINTS 10' O.C.

2 / F-2.7 EDGE ANCHOR AT CONCRETE CURB

NOT TO SCALE

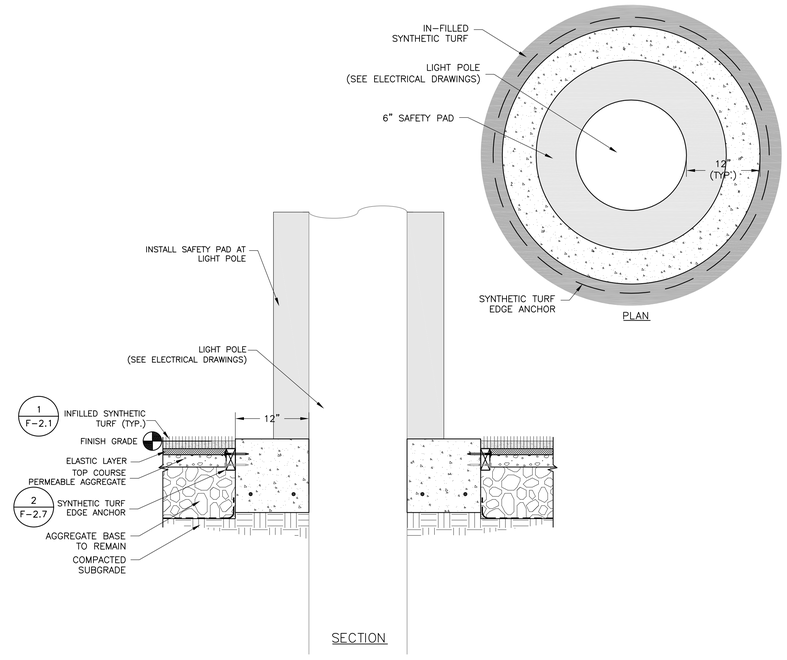

4 / F-2.7 EDGE ANCHOR AT LIGHT POLE FOUNDATION

NOT TO SCALE

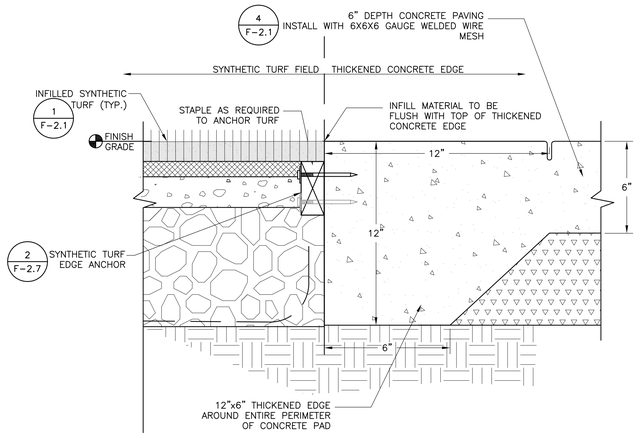

3 / F-2.7 EDGE ANCHOR AT THICKENED CONCRETE EDGE

NOT TO SCALE

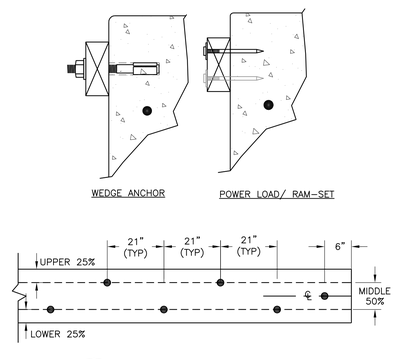

NOTES:

1. THE PLASTIC EDGE ANCHOR MAY BE TEMPORARILY SET WITH POWER-LOADS PLACED AT THE CONTRACTORS OPTION TO ASSIST IN ESTABLISHING THE PROPER LINE AND GRADE. THIS TEMPORARY HARDWARE MAY REMAIN AFTER FINAL INSTALLATION.
2. THE CONTRACTOR MAY CHOOSE TO UTILIZE STEEL POWER-LOAD DRIVEN OR RAM-SET CONCRETE ANCHOR NAILS, MINIMUM SHANK DIAMETER 5/32", MINIMUM HEAD/WASHER DIAMETER 3/8", SUFFICIENT LENGTH TO INSURE A MINIMUM 2" EMBEDMENT. INDIVIDUAL ANCHORS SHALL DEVELOP A MINIMUM 450LB SHEAR, 350LB TENSION IN 4,000PSI CONCRETE AT 2" EMBEDMENT.
3. ONCE INITIAL LINE AND GRADE HAS BEEN ESTABLISHED, INSTALL THE SPECIFIED RAM-SET OR POWER-LOAD DRIVEN CONCRETE ANCHORING NAILS IN MANNER CONSISTENT WITH THE APPROVED MANUFACTURERS PRINTED INSTRUCTION AND THE SPECIFIED SPACING.
4. WEDGE ANCHOR TO BE SET AT MIDDLE 50% OF EACH BOARD. 30" O.C. MAX., 4-6" FROM ENDS.
5. MINIMUM REQUIREMENTS FOR CONCRETE ANCHOR NAIL INSTALLATION DEPTH OF EMBEDMENT: 2" OR AS RECOMMENDED BY THE ANCHOR SUPPLIER, WHICHEVER IS GREATER. HORIZONTAL SPACING: NO GREATER THAN 21" ON CENTER AND 6" FROM END OF ANY LENGTH OF LUMBER. STAGGER THE SPACING OF EACH ANCHOR UP AND DOWN WITHIN THE MIDDLE ONE-HALF THE FACE OF THE RECYCLED EDGE ANCHOR.

5 / F-2.7 SYNTHETIC TURF EDGE ANCHOR

NOT TO SCALE

REVISION	DATE

City of Duvall
Small Town. Real Life.

BIG ROCK PARK MULTI PURPOSE FIELD

DA HOGAN
119 1st Avenue South, Suite 110
Seattle, Washington 98104
p. 206.285.0400
f. 206.285.0480

STATE OF WASHINGTON
ROBERT S. HARDING
L.A.P. SEAL NO. 1.19
LANDSCAPE ARCHITECT

SEPA SET	
DATE	8-12-16
SCALE	NTS
DRAWN	CPW/DMD
CHECKED	RSH

COPYRIGHT © 2016 D.A. HOGAN & ASSOCIATES

EDGE ANCHOR DETAILS

SHEET

F-2.7

File: F-2.7 Edge Anchor Details.dwg Plotted by: CorneliaW Date: 12-Aug-16 1:26:11pm

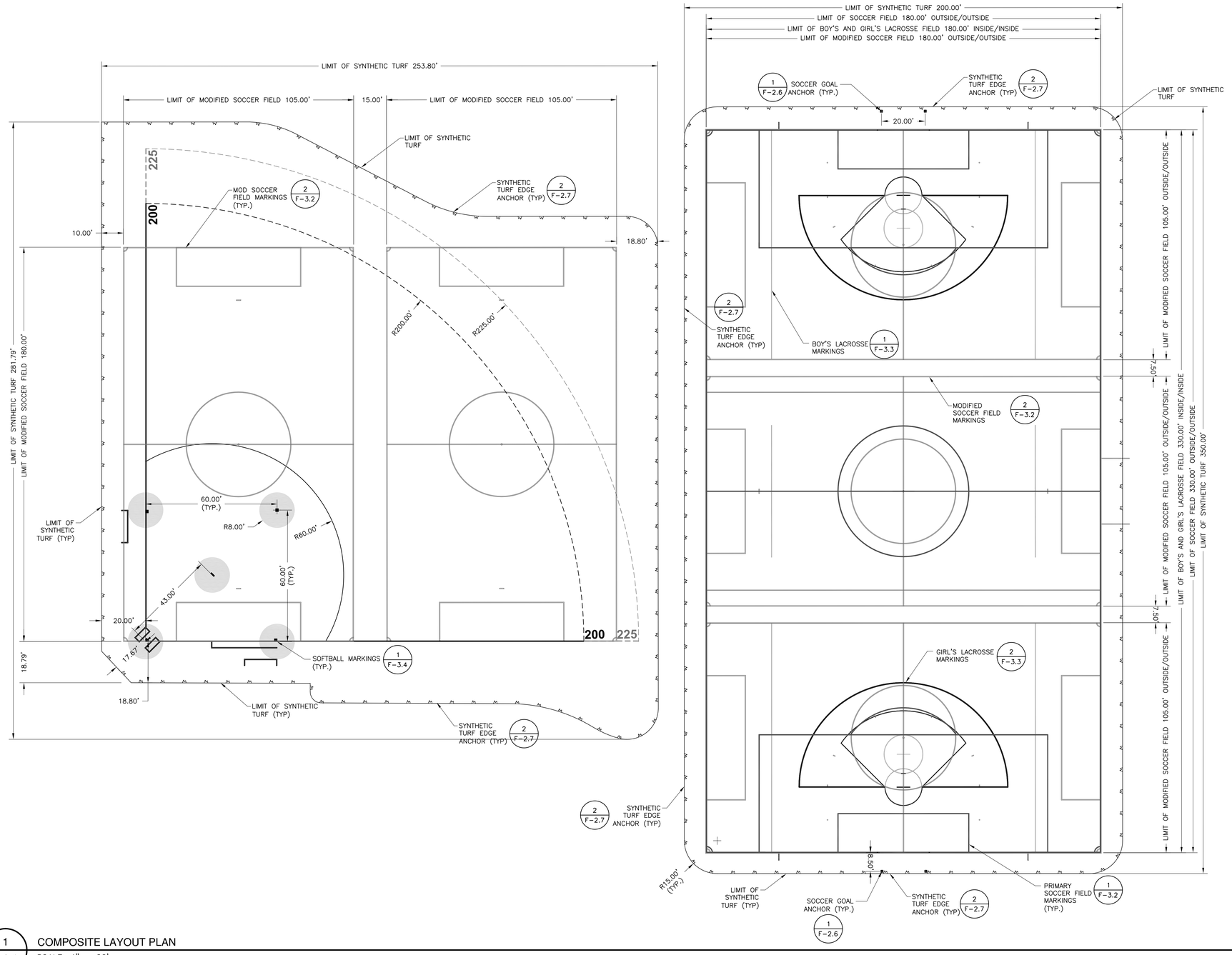

1 / F-3.1 COMPOSITE LAYOUT PLAN

SCALE: 1" = 20'

REVISION	DATE

City of Duvall
Small Town. Real Life.

BIG ROCK PARK MULTI PURPOSE FIELD

DA HOGAN
119 1st Avenue South, Suite 110
Seattle, Washington 98104
p. 206.285.0400
f. 206.285.0480

STATE OF WASHINGTON
ROBERT S. HARDING
EXP. 2/28/2017 NO. 2116
LANDSCAPE ARCHITECT

SEPA SET

DATE	8-12-16
SCALE	1"=20'
DRAWN	CPW/DMD
CHECKED	RSH

COPYRIGHT © 2016 D.A. HOGAN & ASSOCIATES

COMPOSITE LAYOUT PLAN & DETAILS

SHEET

F-3.1

File: F-3.1 Composite Layout Plan & Details.dwg Plotted by: CorneliaW Date: 12-Aug-16 1:24:34pm

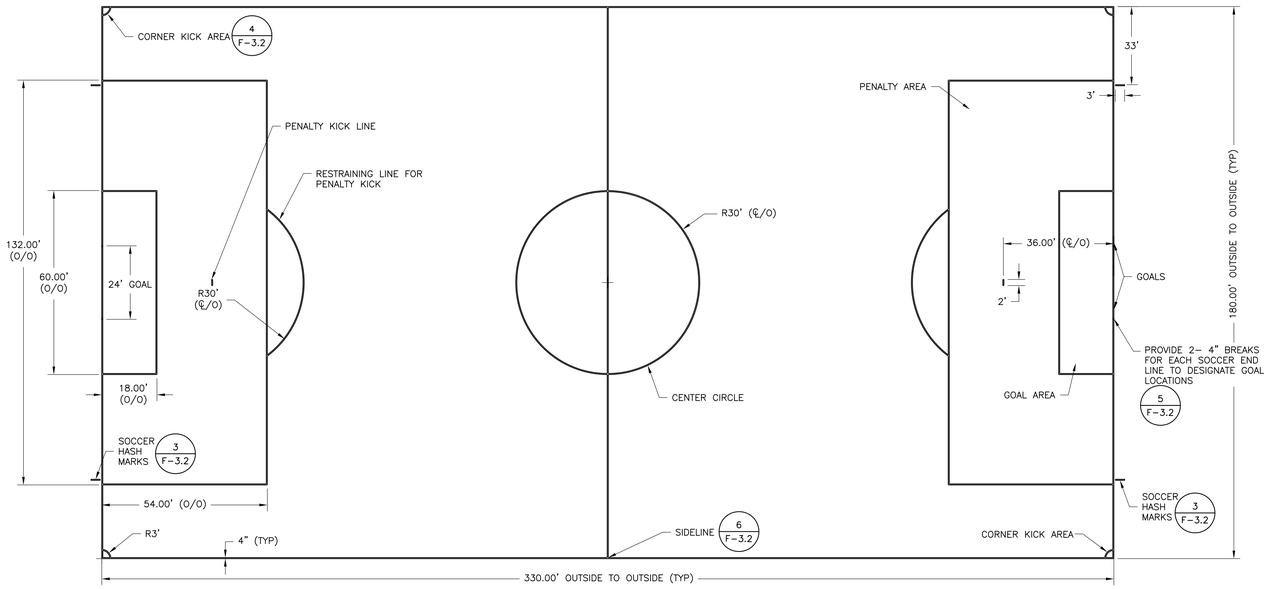

SOCCER LAYOUT NOTES

1. CONTRACTOR SHALL VERIFY ALL DIMENSIONS. ALL LINE WORK IS TO BE LAID OUT WITH A TOLERANCE OF 1/4 INCH.
2. ALL SOCCER LINES ARE 4 INCH YELLOW/GOLD INLAID TURF AS DIMENSIONED ON SOCCER LAYOUT PLAN.
3. THE SOCCER GOAL AREA IS 18 FEET BY 60 FEET. REFER TO PLAN FOR LOCATION.
4. THE SOCCER PENALTY AREA IS 54 FEET BY 132 FEET.
5. THE PENALTY MARK IS A 2 FOOT LINE, 4 INCHES WIDE, 36 FEET FROM THE END LINE AND CENTERED ON THE GOAL. THE RESTRAINING LINE FOR PENALTY KICK AN ARC 30 FEET FROM THIS MARK OUTSIDE OF THE PENALTY AREA. REFER TO PLAN FOR LOCATION.
6. THE HALFWAY LINE FOR THE SOCCER FIELD IS A 4 INCH YELLOW INLAID LINE WITH A CIRCLE, 30 FEET IN RADIUS IN THE CENTER OF THE FIELD. THE RADIUS POINT OF THE MIDFIELD CIRCLE WILL BE INLAID YELLOW DOT WITH A 9 INCH DIAMETER.
7. THE CORNERS OF THE SOCCER FIELD SHALL HAVE A 3 FOOT RADIUS IN YELLOW TURF DESIGNATING THE CORNER KICK AREA. THE HASH MARK IS A 3 FOOT LINE, 4 INCHES WIDE, 33 FEET FROM THE SIDE LINE AND EXTENDS AWAY FROM THE FIELD OF PLAY.

1 / F-3.2 PRIMARY SOCCER LAYOUT MARKING PLAN

SCALE: 1" = 20'

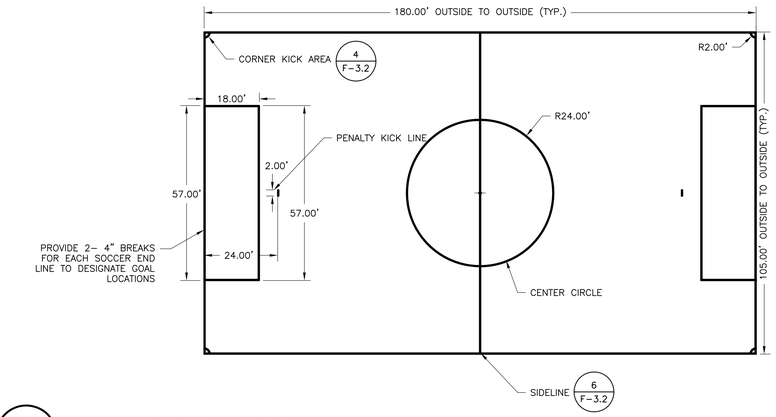

MODIFIED SOCCER LAYOUT NOTES

1. CONTRACTOR SHALL VERIFY ALL DIMENSIONS. ALL LINE WORK IS TO BE LAID OUT WITH A TOLERANCE OF 1/4 INCH.
2. ALL SOCCER LINES ARE 4 INCH YELLOW/GOLD INLAID TURF AS DIMENSIONED ON SOCCER LAYOUT PLAN.
3. THE SOCCER GOAL AREA IS 18 FEET BY 57 FEET. REFER TO PLAN FOR LOCATION.
4. THE SOCCER PENALTY AREA IS 42 FEET BY 105 FEET.
5. THE PENALTY MARK IS A 2 FOOT LINE, 4 INCHES WIDE, 24 FEET FROM THE END LINE AND CENTERED ON THE GOAL. THE RESTRAINING LINE FOR PENALTY KICK AN ARC 24 FEET FROM THIS MARK OUTSIDE OF THE PENALTY AREA. REFER TO PLAN FOR LOCATION.
6. THE HALFWAY LINE FOR THE SOCCER FIELD IS A 4 INCH YELLOW INLAID LINE WITH A CIRCLE, 24 FEET IN RADIUS IN THE CENTER OF THE FIELD. THE RADIUS POINT OF THE MIDFIELD CIRCLE WILL BE INLAID YELLOW DOT WITH A 9 INCH DIAMETER.
7. THE SOCCER LINE WILL EXTEND BEYOND THE FOOTBALL SIDELINE BEGINNING 4INCHES OUTSIDE THE 8 INCH SIDELINE AND EXTENDING THROUGH THE COACHES BOX.
8. THE CORNERS OF THE SOCCER FIELD SHALL HAVE A 2 FOOT RADIUS IN YELLOW TURF DESIGNATING THE CORNER KICK AREA.
9. MOD SOCCER LINES ARE SECONDARY TO PRIMARY SOCCER MARKINGS.

2 / F-3.2 MODIFIED SOCCER LAYOUT PLAN

1"=20'

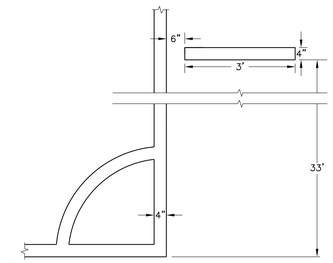

3 / F-3.2 SOCCER HASH MARKS

NOT TO SCALE

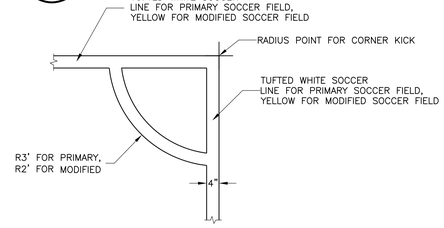

4 / F-3.2 CORNER KICK DETAIL

NOT TO SCALE

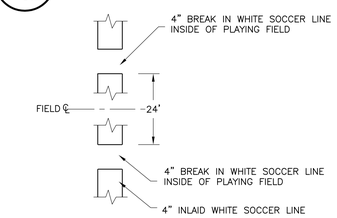

5 / F-3.2 SOCCER GOAL ALIGNMENT SQUARES

NOT TO SCALE

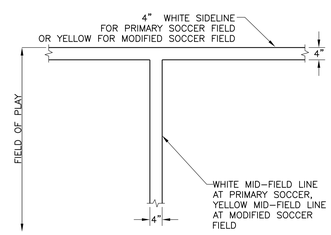

6 / F-3.2 SOCCER SIDELINE

NOT TO SCALE

REVISION	DATE

City of Duvall
Small Town. Real Life.

BIG ROCK PARK MULTI PURPOSE FIELD

DA HOGAN
119 1st Avenue South, Suite 110
Seattle, Washington 98104
p. 206.285.0400
f. 206.285.0480

STATE OF WASHINGTON · ROBERT S. HARDING · EXP. 2/28/2017 · LICENSE NO. 618 · LANDSCAPE ARCHITECT

SEPA SET	
DATE	8-12-16
SCALE	NTS
DRAWN	CPW/DMD
CHECKED	RSH

COPYRIGHT © 2016 D.A. HOGAN & ASSOCIATES

SOCCER LAYOUT PLAN & DETAILS

SHEET

F-3.2

File: F-3.2 Soccer Layout Plan & Details.dwg Plotted by: CorneliaW Date: 12-Aug-16 1:23:38pm

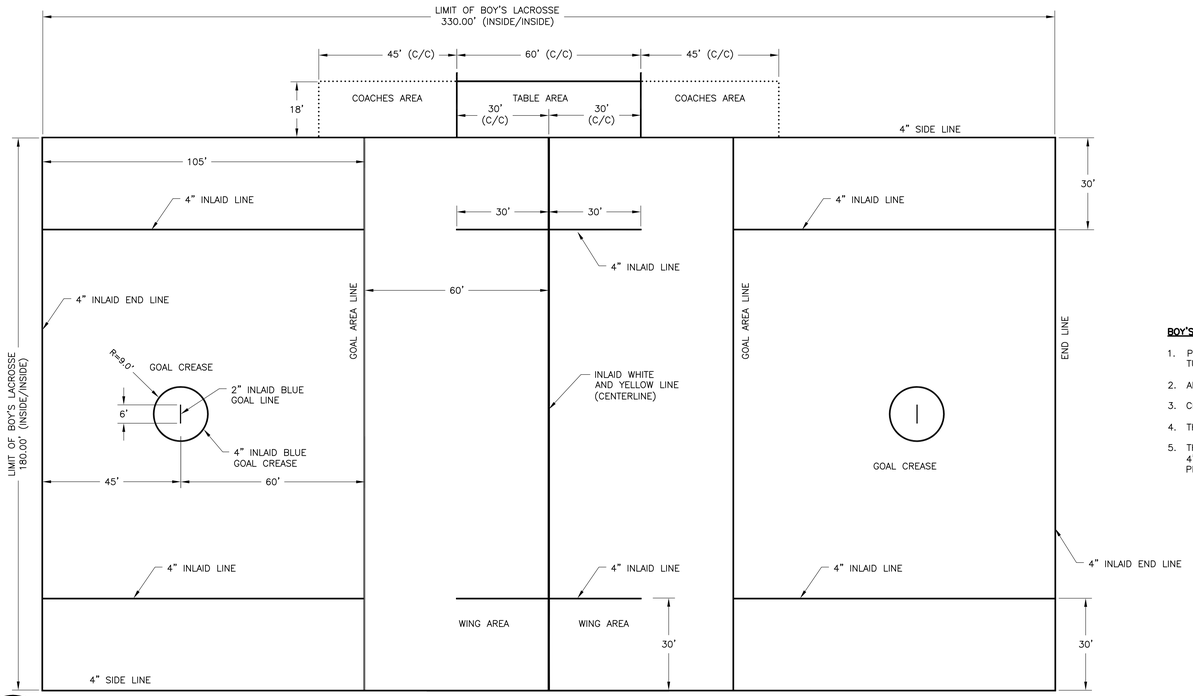

BOY'S LACROSSE NOTES

1. PROVIDE LACROSSE LINES AND MARKINGS WITH 4" WIDE INLAID BLUE TURF.
2. ALL DIMENSIONS SPECIFIED ARE FOR BOY'S LACROSSE ONLY.
3. CENTER LINE ON LACROSSE FIELD IS A YELLOW LINE.
4. THE GOAL LINE SHALL BE A 2" BLUE INLAID LINE.
5. THE SUBSTITUTION AREA AND COACHES AREA WILL BE DEFINED BY 4" BLUE INLAID HASH MARKS EXTENDING 3' OUTSIDE THE FIELD OF PLAY AS SHOWN ON THE PLAN.

1 / F-3.3 BOY'S LACROSSE LAYOUT PLAN

SCALE 1"=20'

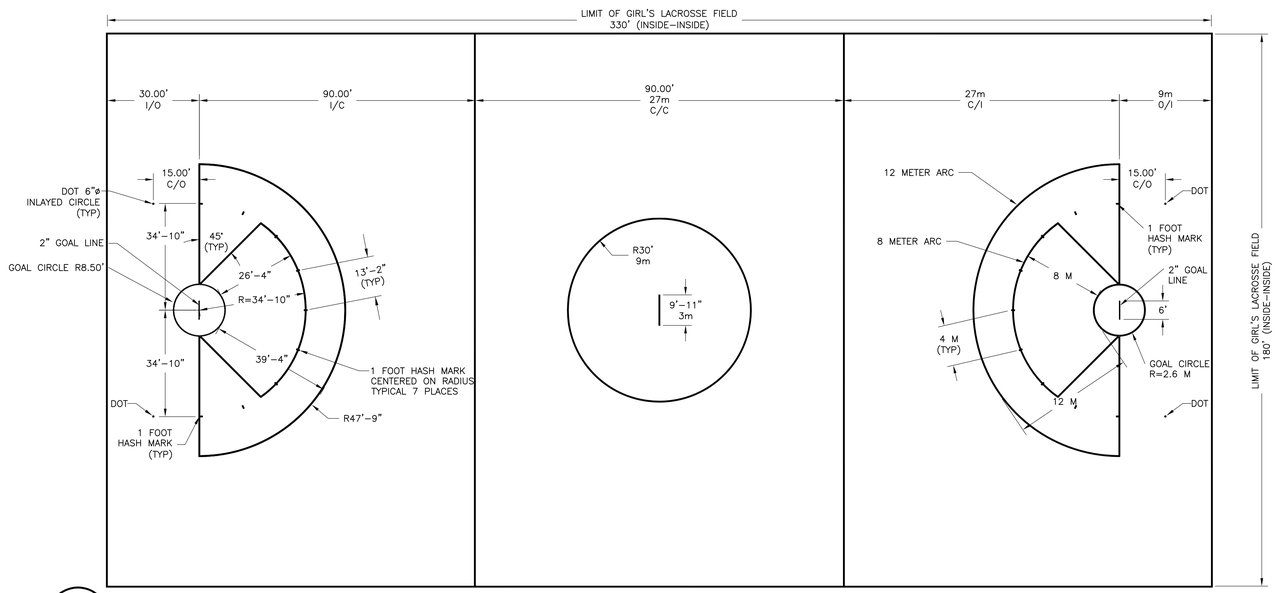

GIRL'S LACROSSE NOTES:

1. TWO ARCS SHALL BE MARKED 8 METERS (8.8 YARDS) AND 12 METERS (13 YARDS) FROM THE GOAL CIRCLES. THE ARCS SHALL BE MEASURED FROM THE CENTER OF THE GOAL LINE, 10.6 METERS (34 FEET, 10 INCHES) FOR THE 8-METER MARK AND 14.6 METERS (47 FEET, 9 INCHES) FOR THE 12-METER MARK. THE 8 METER ARC SHALL END ON A LINE ON EACH SIDE THAT RUNS FROM A POINT ON EACH SIDE OF THE GOAL CIRCLE, WHERE IF THE GOAL LINE WERE CONTINUED IT WOULD CROSS THE GOAL LINE. THIS LINE WILL BE AT A 45-DEGREE ANGLE TO THE GOAL LINE EXTENDED. THE 8-METER ARC WILL BE SECTIONED OFF BY HASH MARKS 30.5 CENTIMETERS, (1 FOOT) IN LENGTH, PERPENDICULAR AND BISECTING THE ARC. THESE WILL BE MEASURED 4, 8 AND 12 METERS, RESPECTIVELY, FROM EITHER SIDE OF THE CENTER HASH MARK, WHICH SHALL BE MEASURED FROM THE CENTER OF AND PERPENDICULAR TO THE CENTER OF THE GOAL LINE, (10.6 METERS/34 FEET, 10 INCHES). TWO ADDITIONAL 30.5 CENTIMETER (1 FOOT) HASH MARKS WILL BE MADE 8 METERS FROM THE GOAL CIRCLE, PERPENDICULAR TO THE GOAL LINE EXTENDED. THE 12-METER ARC WILL END AT THE GOAL LINE EXTENDED. ALL LINES ARE 4" WIDE EXCEPT FOR THE 2" GOAL LINE.
2. THE GOAL CIRCLE HAS A RADIUS OF 2.6 METERS (8 FEET, 6 INCHES) MEASURED FROM THE CENTER OF THE GOAL LINE TO THE OUTER EDGE OF THE GOAL-CIRCLE LINE. THE GOAL CIRCLE LINE SHALL BE 5 CENTIMETERS (2 INCHES) WIDE.
3. ALL LINES SHALL BE 4" RED LINES EXCEPT AT GOAL CREASE.

2 / F-3.3 GIRL'S LACROSSE LAYOUT PLAN

SCALE 1"=20'

REVISION	DATE

City of Duvall
Small Town. Real Life.

BIG ROCK PARK
MULTI PURPOSE
FIELD

DA HOGAN
119 1st Avenue South, Suite 110
Seattle, Washington 98104
p. 206.285.0400
f. 206.285.0480

STATE OF WASHINGTON
ROBERT S. HARDING
LANDSCAPE ARCHITECT

SEPA SET

DATE	8-12-16
SCALE	1"=20'
DRAWN	CPW/DMD
CHECKED	RSH

COPYRIGHT © 2016 D.A. HOGAN & ASSOCIATES

LACROSSE
LAYOUT PLANS

SHEET

F-3.3

File: F-3.3 LAX Layout Plans.dwg Plotted by: CorneliaW Date: 12-Aug-16 1:22:57pm

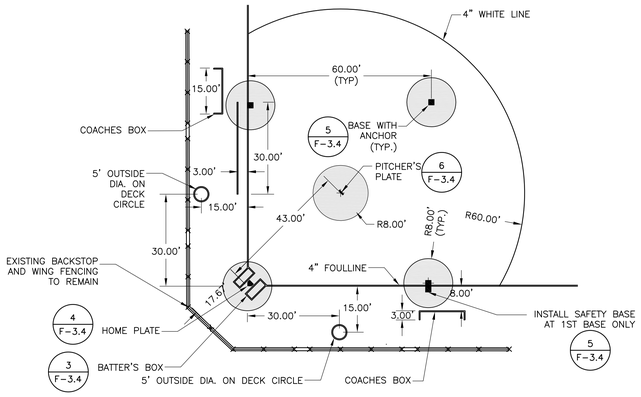

1 / F-3.4 INFIELD MARKING PLAN

SCALE 1"=20'

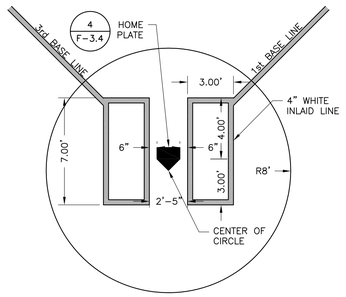

3 / F-3.4 SOFTBALL BATTERS BOX

NOT TO SCALE

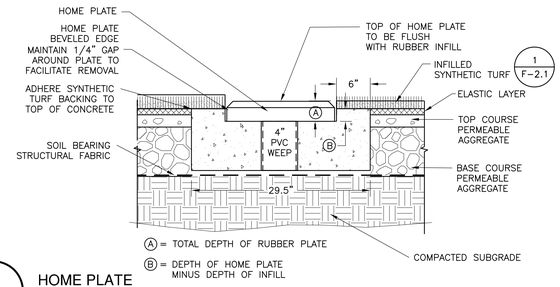

4 / F-3.4 HOME PLATE

NOT TO SCALE

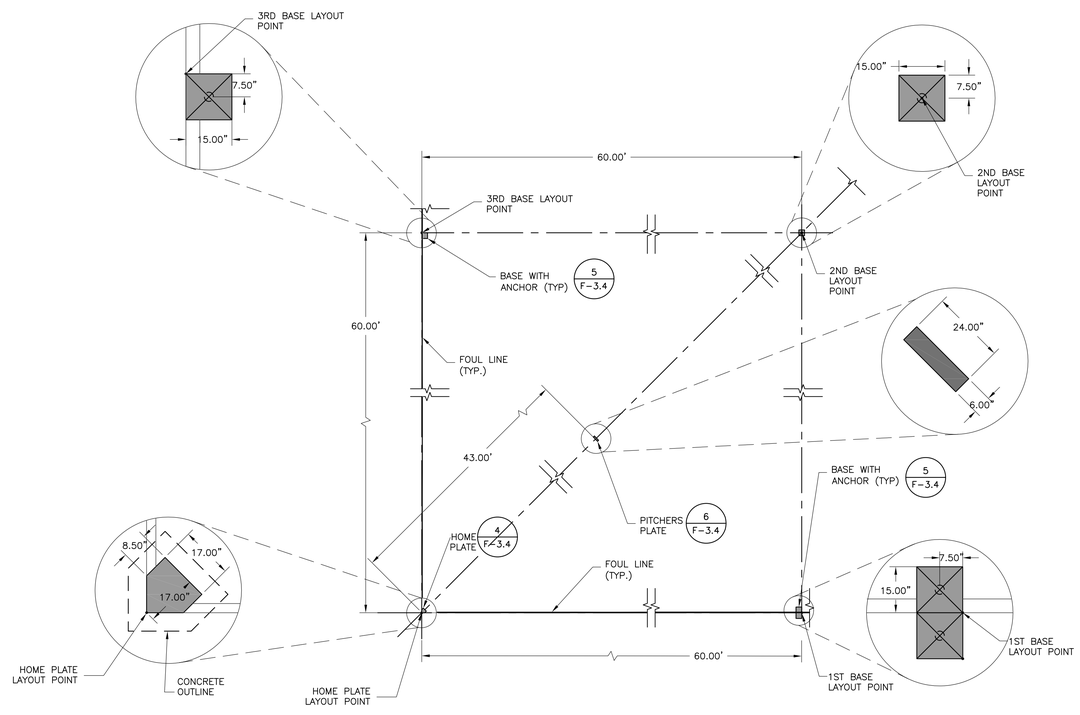

2 / F-3.4 BASE AND PLATE ANCHOR LAYOUT

NOT TO SCALE

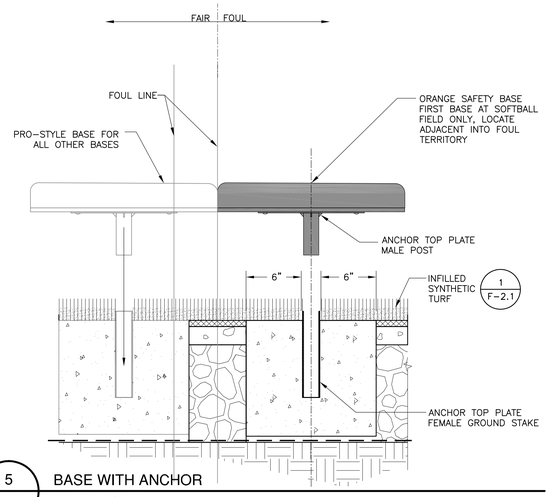

5 / F-3.4 BASE WITH ANCHOR

NOT TO SCALE

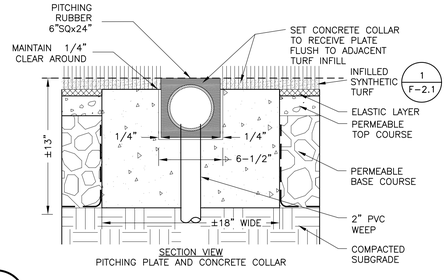

6 / F-3.4 PITCHER'S PLATE

NOT TO SCALE

REVISION	DATE

City of Duvall
Small Town. Real Life.

BIG ROCK PARK MULTI PURPOSE FIELD

DA HOGAN
119 1st Avenue South, Suite 110
Seattle, Washington 98104
p. 206.285.0400
f. 206.285.0480

STATE OF WASHINGTON
ROBERT S. HARDING
REG. LANDSCAPE ARCHITECT NO. 2418

SEPA SET	
DATE	8-12-16
SCALE	NTS
DRAWN	CPW/DMD
CHECKED	RSH

COPYRIGHT © 2016 D.A. HOGAN & ASSOCIATES

SOFTBALL LAYOUT PLAN & DETAILS

SHEET

F-3.4

File: F-3.4 Softball Layout Plan & Details.dwg Plotted by: CorneliuW Date: 12-Aug-16 1:20:48pm

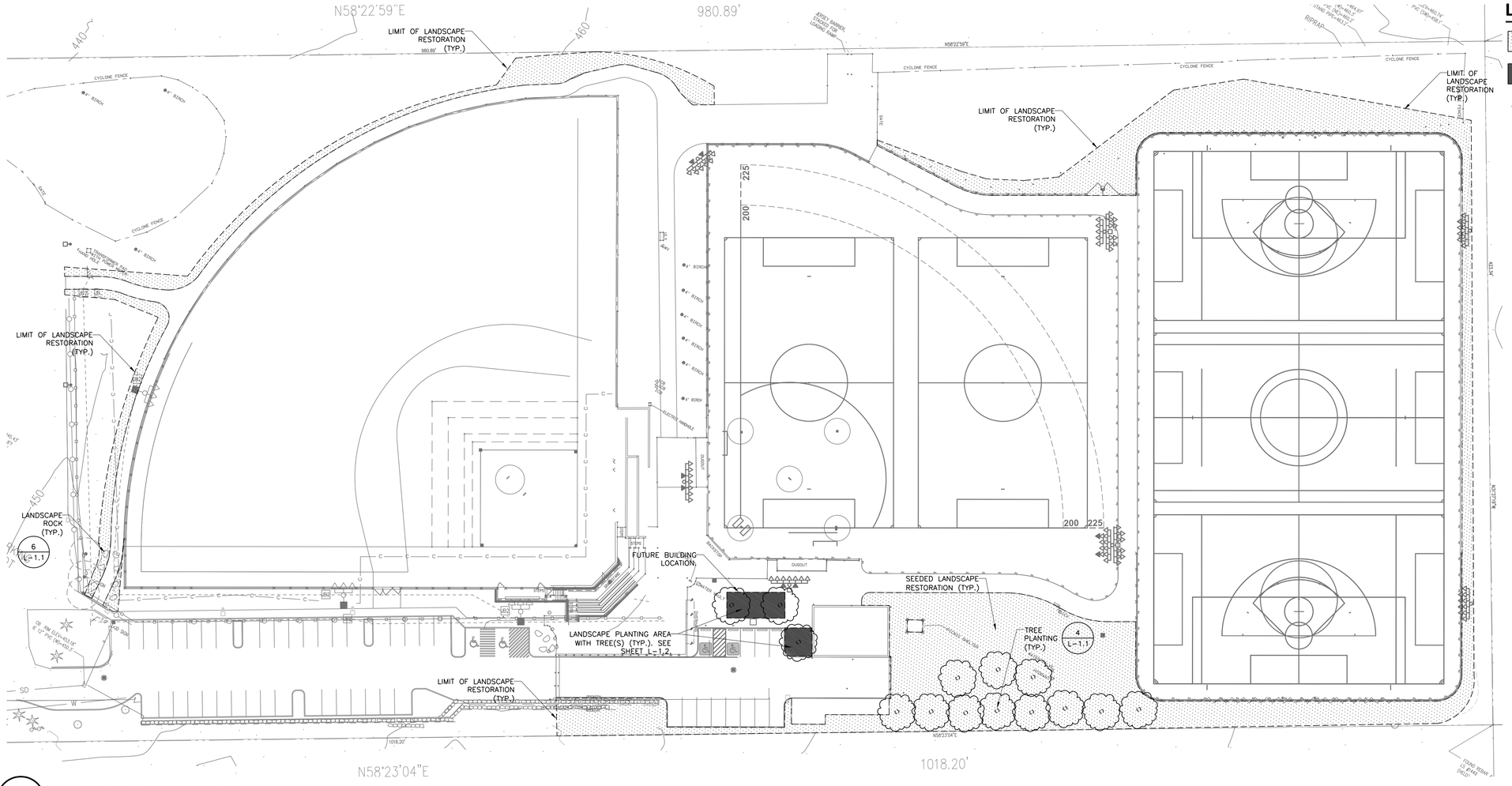

LAYOUT LEGEND

- SEEDED SITE RESTORATION 32,106 SF
- LANDSCAPE PLANTING 870 SF
- DECIDIOUS TREES

1 / L-1.1 LANDSCAPE & RESTORATION PLAN

SCALE: 1" = 30'

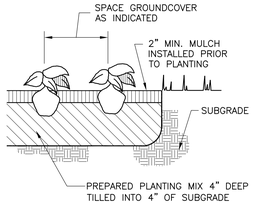

2 / L-1.1 GROUND COVER

NOT TO SCALE

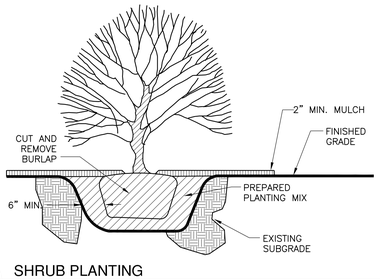

3 / L-1.1 SHRUB PLANTING

NOT TO SCALE

NOTE:
DO NOT PLANT IN WET CONDITIONS PROVIDE DRAINAGE FROM EACH PLANTING PIT IF NECESSARY

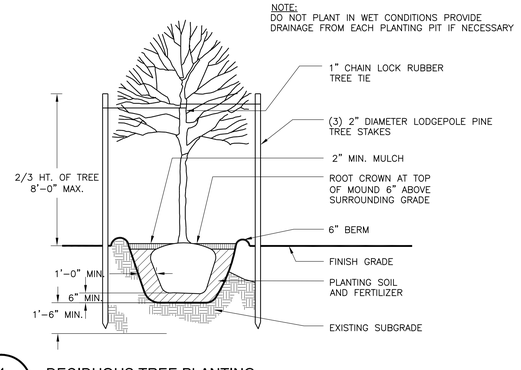

4 / L-1.1 DECIDUOUS TREE PLANTING

NOT TO SCALE

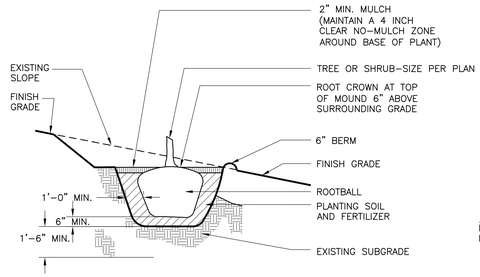

NOTE:
DO NOT PLANT IN WET CONDITIONS PROVIDE DRAINAGE FROM EACH PLANTING PIT IF NECESSARY

5 / L-1.1 TREE-SHRUB PLANTING ON SLOPE

NOT TO SCALE

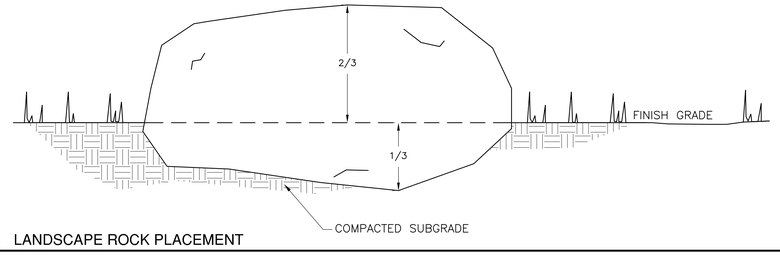

6 / L-1.1 LANDSCAPE ROCK PLACEMENT

NOT TO SCALE

REVISION	DATE

City of Duvall
Small Town. Real Life.

BIG ROCK PARK MULTI PURPOSE FIELD

DA HOGAN
119 1st Avenue South, Suite 110
Seattle, Washington 98104
p. 206.285.0400
f. 206.285.0480

STATE OF WASHINGTON
ROBERT S. HARDING
LANDSCAPE ARCHITECT

SEPA SET

DATE	8-12-16
SCALE	NTS
DRAWN	CPW/DMD
CHECKED	RSH

COPYRIGHT © 2016 D.A. HOGAN & ASSOCIATES

LANDSCAPE & RESTORATION PLAN & DETAILS

SHEET

L-1.1

File: L-1.1 Planting Plan & Details.dwg Plotted by: JessicaM Date: 15-Aug-16 9:52:10am

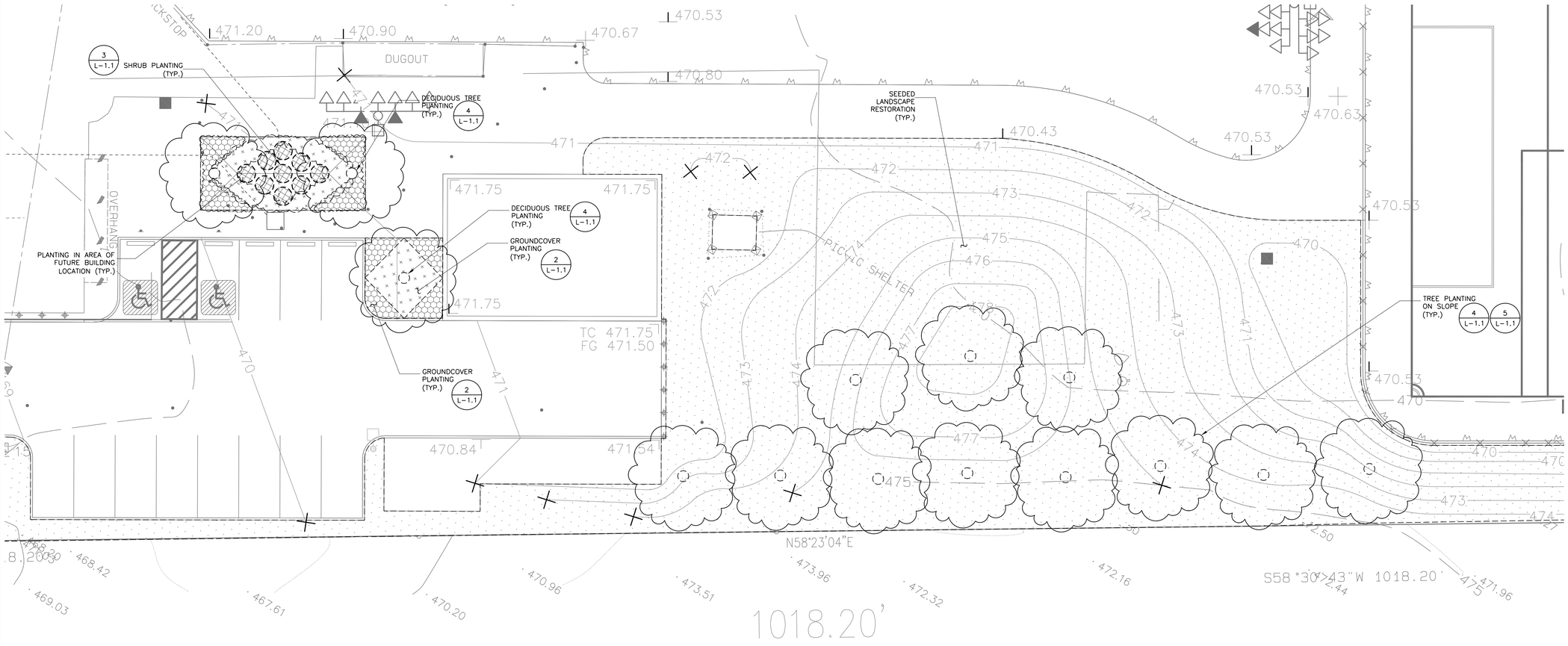

PLANT SCHEDULE

BOTANICAL NAME	COMMON NAME	SIZE	QUANTITY	SPECIFCATIONS
ALNUS RUBRA	RED ALDER	2" CAL, 8'-10' HEIGHT	14	FULL AND BUSHY
SYMPHORICARPOS ALBA	SNOWBERRY	1 GAL.	9	FULL AND BUSHY, 48" O.C.
ARCTOSTAPHYLOS UVA-URSI	KINNIKINNIK	1 GAL.	44	FULL AND BUSHY, 36" O.C.
ASARUM CAUDATUM	WILD GINGER	1 GAL.	88	24" O.C.
	SEEDED SITE RESTORATION		32,106 SF	

File: L-1.1 Planting Plan & Details.dwg Plotted by: JessicaM Date: 15-Aug-16 9:46:23am

REVISION	DATE

City of Duvall
Small Town. Real Life.

BIG ROCK PARK
MULTI PURPOSE
FIELD

DA HOGAN
119 1st Avenue South, Suite 110
Seattle, Washington 98104
p. 206.285.0400
f. 206.285.0480

STATE OF WASHINGTON
ROBERT S. HARDING
LANDSCAPE ARCHITECT

SEPA SET

DATE	8-12-16
SCALE	1" = 10'
DRAWN	CPW/DMD
CHECKED	RSH

COPYRIGHT © 2016 D.A. HOGAN & ASSOCIATES

DETAILED
PLANTING PLAN

SHEET
L-1.2

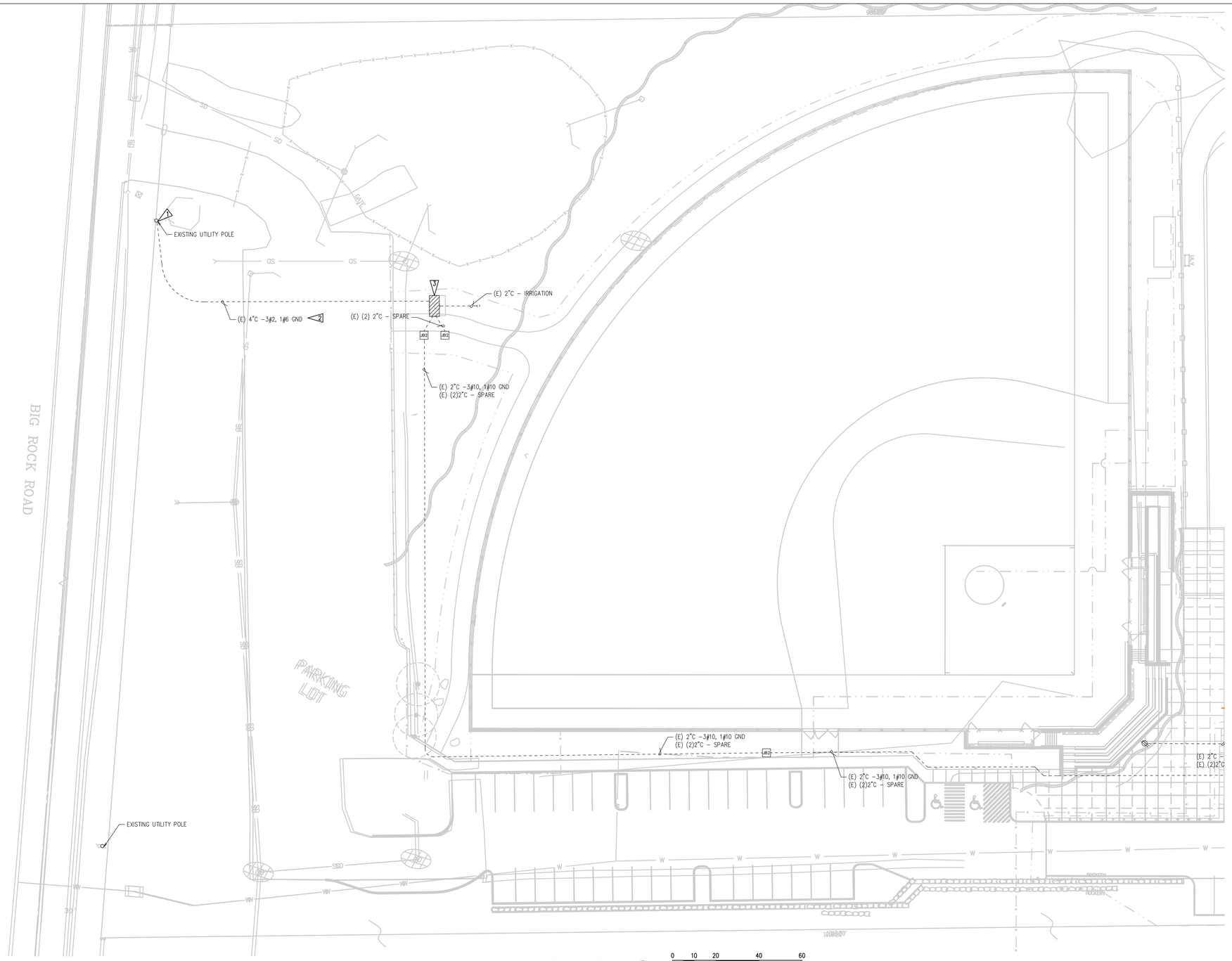

ELECTRICAL SITE PLAN

SCALE: AS INDICATED

0 10 20 40 60

1 inch plotted — Feet

If measurement is other than 1 inch then the plot is reduced.

GENERAL NOTES:

1. JUNCTION BOX LOCATIONS AND CONDUIT ROUTING ARE SCHEMATIC. ALIGN JUNCTION BOXES WITH PAVEMENT EDGES. CONDUIT ROUTING SHALL AVOID TREES. SUBMIT CONDUIT AND JUNCTION BOX LAYOUT PLAN TO ENGINEER PRIOR TO INSTALLATION.
2. MAINTAIN AND PROTECT ALL EXISTING UNDERGROUND UTILITIES. CONTRACTOR TO PROVIDE LOCATE PRIOR TO ANY EXCAVATION. PRIOR TO STARTING CONSTRUCTION, CONTRACTOR SHALL CALL 811 LOCATES FOR UTILITY LOCATIONS.
3. ALL SPARE/EMPTY CONDUIT TO BE PROVIDED WITH NYLON PULL STRINGS.
4. ALL JUNCTION BOXES AND CONDUITS ARE SHOWN IN APPROXIMATE LOCATIONS. VERIFY LOCATION OF PROPERTY LINE, EASEMENTS AND UTILITIES PRIOR TO PLACEMENT.
5. ALL CONDUITS LENGTHS ARE APPROXIMATE. REFER TO CIVIL DRAWINGS FOR EXACT LENGTHS.
6. CAP ALL UNUSED CONDUITS. WHERE CONDUITS ARE CAPPED MARK LOCATION WITH AN ELECTRICAL MARKER.
7. FIELD BENDING OF STRAIGHT CONDUIT SECTIONS INTO LONG RADIUS SWEEPS IS PREFERRED.
8. GROUND ALL IN-GROUND JUNCTION BOXES, HAND HOLES, AND PULL BOXES PER MOST CURRENT VERSION OF THE NEC.

FLAG NOTES:

1. DEMOLISH EXISTING SECONDARY SERVICE. COORDINATE WITH PSE.
2. MAINTAIN AND PROTECT EXISTING SECONDARY CONDUIT. DEMOLISH EXISTING SECONDARY CONDUCTORS.
3. DEMOLISH EXISTING IRRIGATION PEDESTAL. MAINTAIN AND PROTECT EXISTING IRRIGATION AND ELECTRICAL CONDUIT AND WIRING.

LEGEND :

- - - - - - RACEWAY UNDERGROUND

JB2 JUNCTION BOX, CHRISTY #FL30 WITH FL30T COVER

JB3 JUNCTION BOX, CHRISTY #FL36 WITH FL36T COVER

REVISION	DATE

City of Duvall
Small Town. Real Life.

BIG ROCK PARK MULTI PURPOSE FIELD

DA HOGAN
119 1st Avenue South, Suite 110
Seattle, Washington 98104
p. 206.285.0400
f. 206.285.0480

Stantec
4100 194th Street SW Suite 400
Lynnwood Washington 98036-4613
(206) 677-0555

CHRISTOPHER B. FOX
STATE OF WASHINGTON
31353
REGISTERED PROFESSIONAL ENGINEER

PROGRESS SET	
DATE	8-12-16
SCALE	AS INDICATED
DRAWN	AAU
CHECKED	CBF

COPYRIGHT © 2016 D.A. HOGAN & ASSOCIATES

ELECTRICAL SITE PLAN - DEMO

SHEET

E-1.0

File: E10.dwg Plotted by: kmdavis Date: 15-Aug-16 2:31:00pm
V:\2048\ACTIVE\204819493\CAD-BIM\E10 Aug 15, 2016 2:31 PM By:KMDAVIS

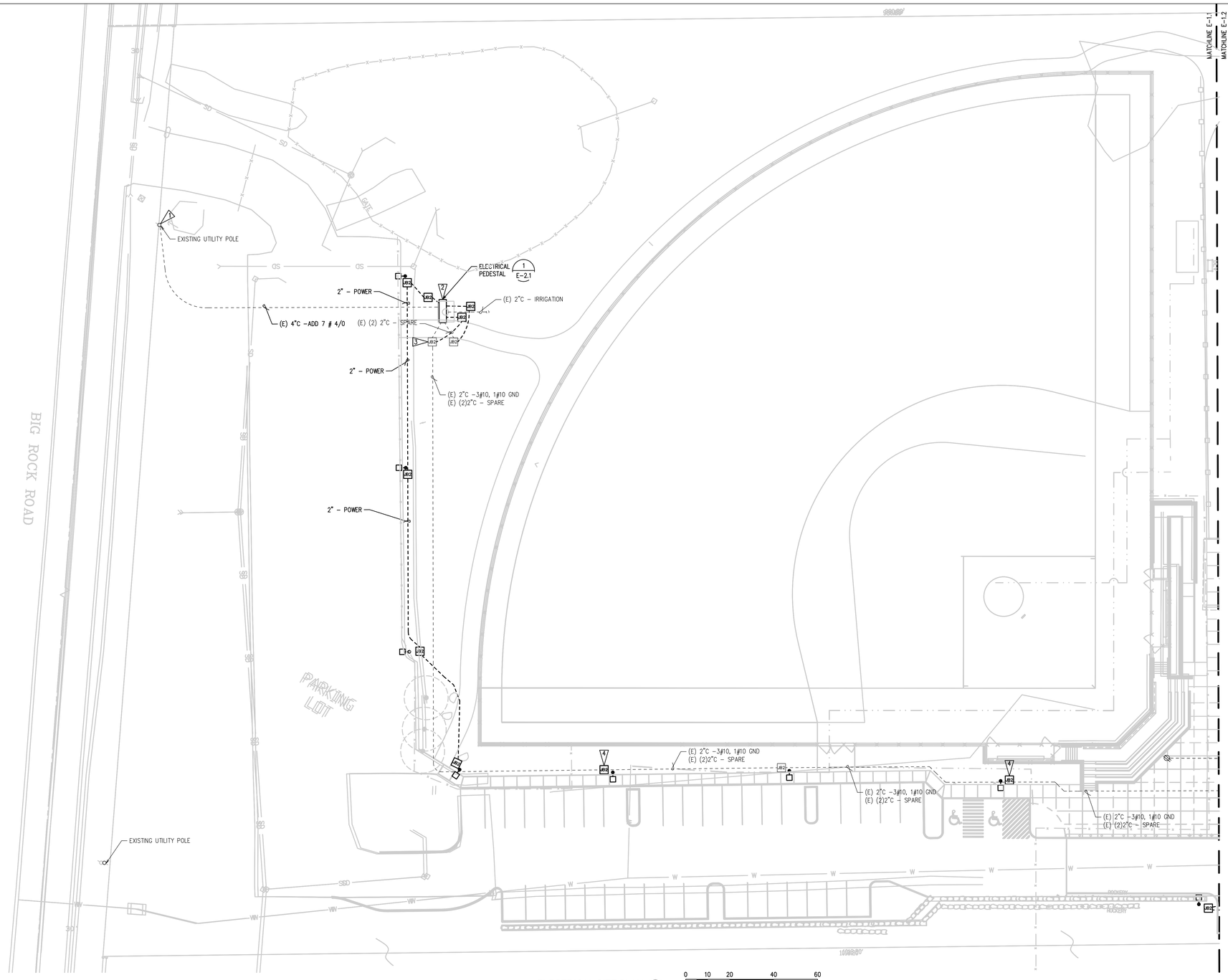

ELECTRICAL SITE PLAN

SCALE: AS INDICATED

0 10 20 40 60

1 inch plotted — Feet

If measurement is other than 1 inch then the plot is reduced.

GENERAL NOTES:

1. JUNCTION BOX LOCATIONS AND CONDUIT ROUTING ARE SCHEMATIC. ALIGN JUNCTION BOXES WITH PAVEMENT EDGES. CONDUIT ROUTING SHALL AVOID TREES. SUBMIT CONDUIT AND JUNCTION BOX LAYOUT PLAN TO ENGINEER PRIOR TO INSTALLATION.
2. MAINTAIN AND PROTECT ALL EXISTING UNDERGROUND UTILITIES. CONTRACTOR TO PROVIDE LOCATE PRIOR TO ANY EXCAVATION. PRIOR TO STARTING CONSTRUCTION, CONTRACTOR SHALL CALL 811 LOCATES FOR UTILITY LOCATIONS.
3. ALL SPARE/EMPTY CONDUIT TO BE PROVIDED WITH NYLON PULL STRINGS.
4. ALL JUNCTION BOXES AND CONDUITS ARE SHOWN IN APPROXIMATE LOCATIONS. VERIFY LOCATION OF PROPERTY LINE, EASEMENTS AND UTILITIES PRIOR TO PLACEMENT.
5. ALL CONDUITS LENGTHS ARE APPROXIMATE. REFER TO CIVIL DRAWINGS FOR EXACT LENGTHS.
6. CAP ALL UNUSED CONDUITS. WHERE CONDUITS ARE CAPPED MARK LOCATION WITH AN ELECTRICAL MARKER.
7. FIELD BENDING OF STRAIGHT CONDUIT SECTIONS INTO LONG RADIUS SWEEPS IS PREFERRED.
8. GROUND ALL IN-GROUND JUNCTION BOXES, HAND HOLES, AND PULL BOXES PER MOST CURRENT VERSION OF THE NEC.

FLAG NOTES:

1. PROVIDE NEW SECONDARY SERVICE. COORDINATE WITH PSE.
2. ROUTE EXISTING CIRCUITS AND CONDUITS INTO NEW PEDESTAL AND CONNECT.
3. INTERCEPT EXISTING SPARE CONDUITS AND EXTEND INTO NEW PEDESTAL.
4. INTERCEPT EXISTING SPARE (3) 2" CONDUITS AND TURN UP INTO NEW JUNCTION BOX.

LEGEND :

- EXISTING RACEWAY UNDERGROUND
- RACEWAY UNDERGROUND
- JB2 EXISTING JUNCTION BOX, CHRISTY #FL30 WITH FL30T COVER
- JB3 EXISTING JUNCTION BOX, CHRISTY #FL36 WITH FL36T COVER
- JB2 JUNCTION BOX, CHRISTY #FL30 WITH FL30T COVER
- JB3 JUNCTION BOX, CHRISTY #FL36 WITH FL36T COVER

REVISION	DATE

City of Duvall
Small Town. Real Life.

BIG ROCK PARK MULTI PURPOSE FIELD

DA HOGAN
119 1st Avenue South, Suite 110
Seattle, Washington 98104
p. 206.285.0400
f. 206.285.0480

Stantec
4100 194th Street SW Suite 400
Lynnwood Washington 98036-4613
(206) 677-0555

CHRISTOPHER B. FOX
STATE OF WASHINGTON
37353
REGISTERED PROFESSIONAL ENGINEER

PROGRESS SET	
DATE	8-12-16
SCALE	AS INDICATED
DRAWN	AAU
CHECKED	CBF

COPYRIGHT © 2016 D.A. HOGAN & ASSOCIATES

ELECTRICAL SITE PLAN

SHEET

E-1.1

V:\2048\ACTIVE\204819493\CAD-BIM\E11 Aug 15, 2016 2:30 PM By:KMDAVIS
File: E11.dwg Plotted by: kmdavis Date: 15-Aug-16 2:30:39pm

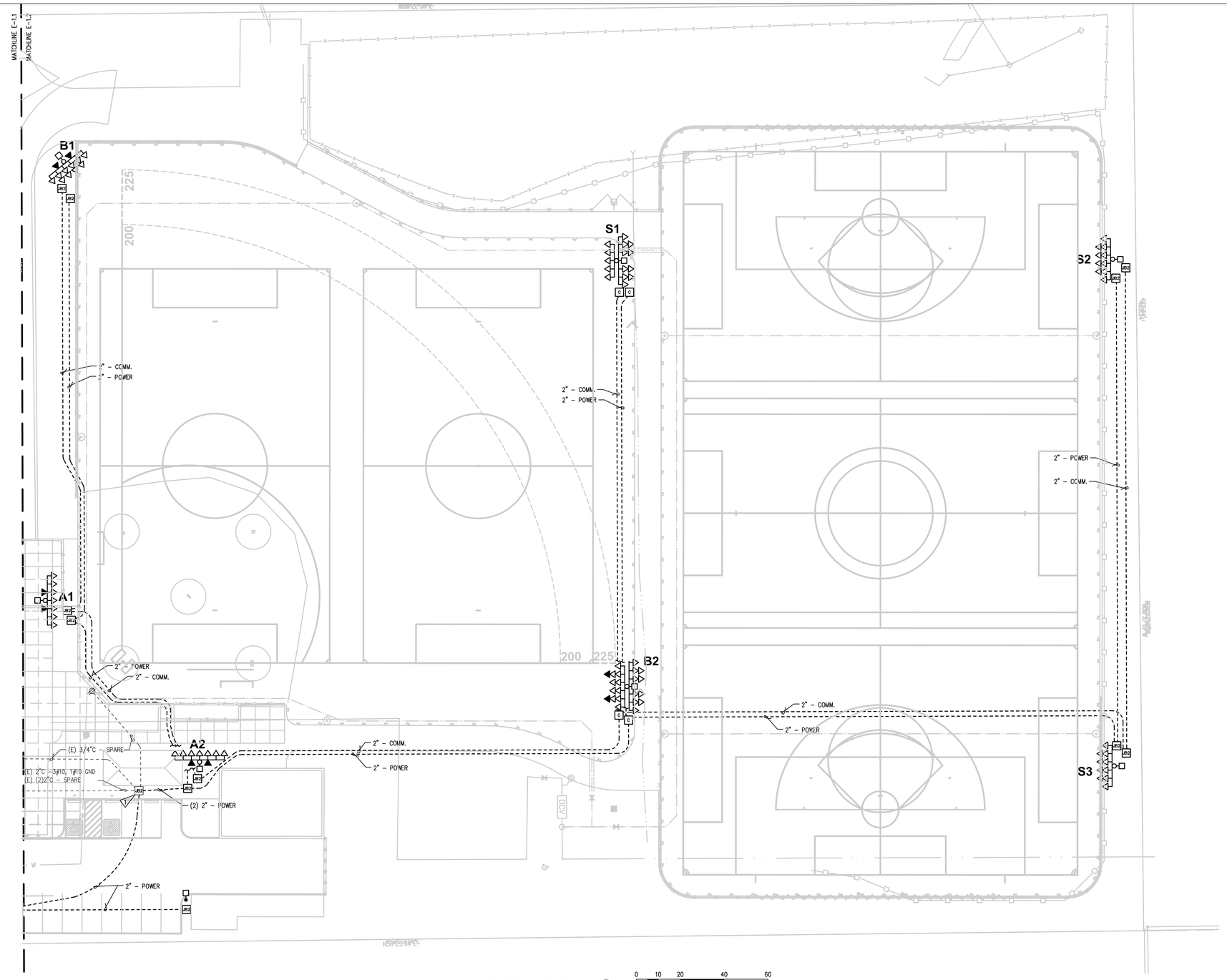

ELECTRICAL SITE PLAN

SCALE: AS INDICATED

0 10 20 40 60

1 inch plotted — Feet

If measurement is other than 1 inch then the plot is reduced.

GENERAL NOTES:

1. JUNCTION BOX LOCATIONS AND CONDUIT ROUTING ARE SCHEMATIC. ALIGN JUNCTION BOXES WITH PAVEMENT EDGES. CONDUIT ROUTING SHALL AVOID TREES. SUBMIT CONDUIT AND JUNCTION BOX LAYOUT PLAN TO ENGINEER PRIOR TO INSTALLATION.
2. MAINTAIN AND PROTECT ALL EXISTING UNDERGROUND UTILITIES. CONTRACTOR TO PROVIDE LOCATE PRIOR TO ANY EXCAVATION. PRIOR TO STARTING CONSTRUCTION, CONTRACTOR SHALL CALL 811 LOCATES FOR UTILITY LOCATIONS.
3. ALL SPARE/EMPTY CONDUIT TO BE PROVIDED WITH NYLON PULL STRINGS.
4. ALL JUNCTION BOXES AND CONDUITS ARE SHOWN IN APPROXIMATE LOCATIONS. VERIFY LOCATION OF PROPERTY LINE, EASEMENTS AND UTILITIES PRIOR TO PLACEMENT.
5. ALL CONDUITS LENGTHS ARE APPROXIMATE. REFER TO CIVIL DRAWINGS FOR EXACT LENGTHS.
6. CAP ALL UNUSED CONDUITS. WHERE CONDUITS ARE CAPPED MARK LOCATION WITH AN ELECTRICAL MARKER.
7. FIELD BENDING OF STRAIGHT CONDUIT SECTIONS INTO LONG RADIUS SWEEPS IS PREFERRED.
8. GROUND ALL IN-GROUND JUNCTION BOXES, HAND HOLES, AND PULL BOXES PER MOST CURRENT VERSION OF THE NEC.

FLAG NOTES:

1 REMOVE EXISTING TYPE 2 JUNCTION BOX AND REPLACE WITH TYPE 3.

LEGEND :

- STEEL FLOODLIGHTING STANDARD
- 630 WATT LED, FULL CUTOFF FLOODLIGHT WITH GLARE CONTROL SHIELDING, 480 VOLT
- 400 WATT LED, UP-LIGHT, 480 VOLT
- AREA LUMINAIRE, 100 WATT LED, 480 VOLT, FULL CUTOFF
- RACEWAY UNDERGROUND
- EXISTING RACEWAY UNDERGROUND
- JB2 EXISTING JUNCTION BOX, CHRISTY #FL30 WITH FL30T COVER
- JB2 JUNCTION BOX, CHRISTY #FL30 WITH FL30T COVER
- JB3 JUNCTION BOX, CHRISTY #FL36 WITH FL36T COVER
- DUPLEX RECEPTACLE, 120V, GFCI
- J NEMA 3R JUNCTION BOX
- C SPORTSFIELD SPECIALTIES COMM BOX WITH TRACK SURFACE COVER. SPORTSFIELD SPECIALTIES #3312.5

POLE AND FLOOD LIGHT SCHEDULE

POLE	HEIGHT	FLOOD LIGHTS	UP-LIGHTS
A1	60	7	2
A2	60	7	2
B1	70	10	2
B2	70	20	2
S1	70	15	
S2	70	10	
S3	70	10	
		79	8

REVISION	DATE

City of Duvall
Small Town. Real Life.

BIG ROCK PARK
MULTI PURPOSE
FIELD

DA HOGAN
119 1st Avenue South, Suite 110
Seattle, Washington 98104
p. 206.285.0400
f. 206.285.0480

Stantec
4100 194th Street SW Suite 400
Lynnwood Washington 98036-4613
(206) 677-0555

PROGRESS SET

DATE	8-12-16
SCALE	AS INDICATED
DRAWN	AAU
CHECKED	CBF

COPYRIGHT © 2016 D.A. HOGAN & ASSOCIATES

ELECTRICAL
SITE PLAN

SHEET

E-1.2

V:\2048\ACTIVE\208819493\CAD-BIM\E12 Aug 15, 2016 2:31 PM By:KMDAVIS
File: E12.dwg Plotted by: kmdavis Date: 15-Aug-16 2:31:21pm

FLAG NOTES:

1. SUPPLIER OF GALVANIZED STEEL POLE TO PROVIDE STRUCTURAL CALCULATIONS FROM A LICENSED STRUCTURAL ENGINEER REGISTERED IN THE STATE OF WASHINGTON. CALCULATION TO INCLUDE WIND AND SEISMIC LOADS PER IBC 2012. SUBMIT WITH MANUFACTURER SHOP DRAWINGS DURING SUBMITTAL PHASE OF PROJECT.
2. MATCH EXISTING GRADE.
3. NOT USED.
4. POLE FOUNDATION CALCULATIONS TO BE PROVIDED BY CONTRACTOR. CALCULATIONS TO BE PROVIDED BY A LICENSED STRUCTURAL ENGINEER REGISTERED IN THE STATE OF WASHINGTON.
5. PROVIDE 2" CONDUITS UP FLOODLIGHT POLE. EXTEND CONDUIT TO ADJACENT JUNCTION BOX.
6. COORDINATE LOCATION OF BRACKET WITH POLE MANUFACTURER.
7. NOT USED.
8. PROVIDE 2' LED STRIPLIGHT WITH DOOR CONTACT SWITCH.

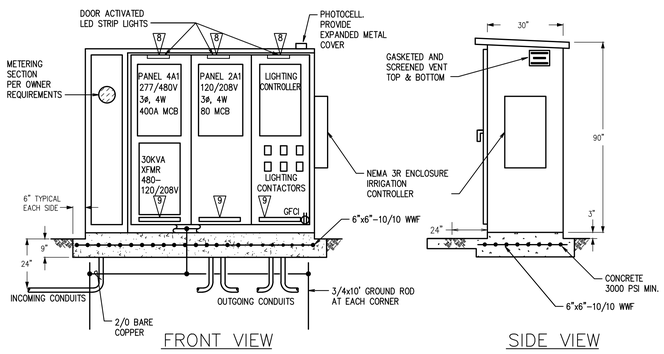

1 E-2.1 ELECTRICAL PEDESTAL DETAIL
SCALE: NONE

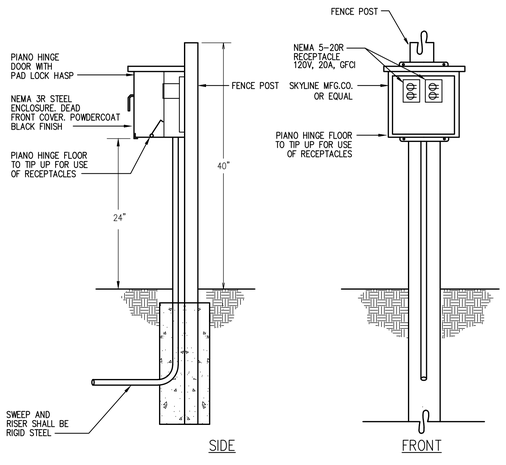

2 E-2.1 BACKSTOP/FESTIVAL POWER BOX DETAIL
SCALE: AS INDICATED

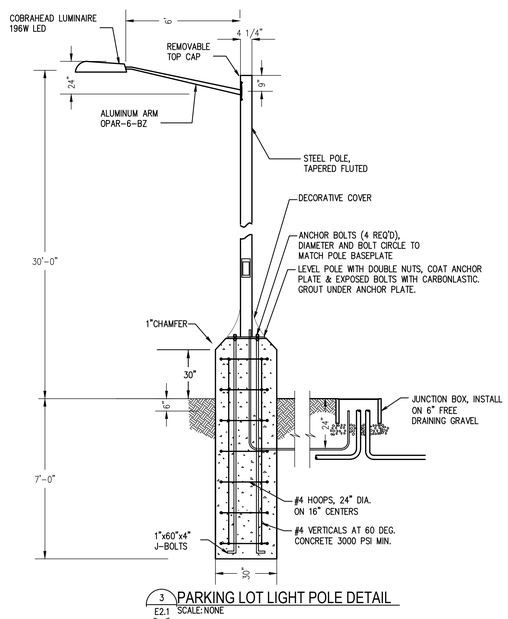

3 E2.1 PARKING LOT LIGHT POLE DETAIL
SCALE: NONE

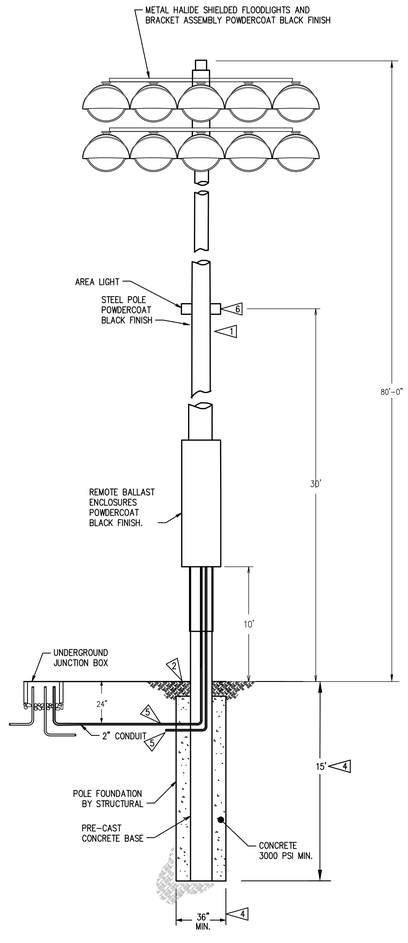

4 E-2.1 METAL HALIDE FLOODLIGHT POLE DETAIL
SCALE: NONE

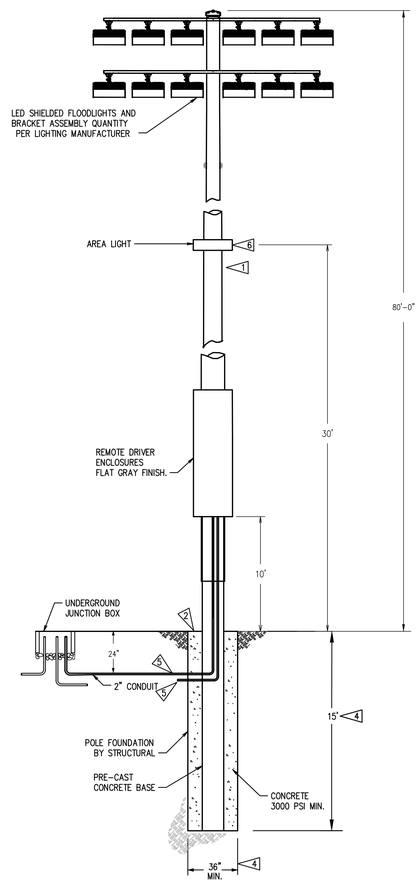

5 E-2.1 LED FLOODLIGHT POLE DETAIL
SCALE: NONE

REVISION	DATE

City of Duvall
Small Town. Real Life.

BIG ROCK PARK MULTI PURPOSE FIELD

DA HOGAN
119 1st Avenue South, Suite 110
Seattle, Washington 98104
p. 206.285.0400
f. 206.285.0480

Stantec
4100 194th Street SW Suite 400
Lynnwood Washington 98036-4613
(206) 677-0555

BILL TOPLIFF STATE OF WASHINGTON 31353 REGISTERED PROFESSIONAL ENGINEER

PROGRESS SET

DATE	8-12-16
SCALE	AS INDICATED
DRAWN	AAU
CHECKED	CBF

COPYRIGHT © 2016 D.A. HOGAN & ASSOCIATES

ELECTRICAL DETAILS

SHEET

E-2.1

File: E21.dwg Plotted by: kimdavis Date: 15-Aug-16 2:31:37pm
V:\2049\ACTIVE\204919493\CAD-BIM\E21 Aug 15, 2016 2:31 PM By:AMDAVIS

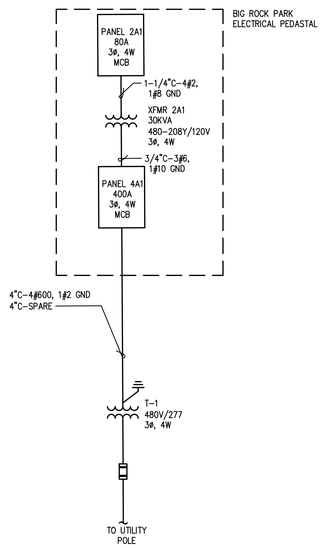

1 / E-2.2 ONE-LINE DIAGRAM
SCALE: NONE

REVISION	DATE

City of Duvall
Small Town. Real Life.

BIG ROCK PARK
MULTI PURPOSE
FIELD

DA HOGAN
119 1st Avenue South, Suite 110
Seattle, Washington 98104
p. 206.285.0400
f. 206.285.0480

Stantec
4100 194th Street SW Suite 400
Lynnwood Washington 98036-4613
(206) 677-0555

REGISTERED PROFESSIONAL ENGINEER
STATE OF WASHINGTON
31353

PROGRESS SET

DATE	8-12-16
SCALE	AS INDICATED
DRAWN	AAU
CHECKED	CBF

COPYRIGHT © 2016 D.A. HOGAN & ASSOCIATES

ONE-LINE
DIAGRAM/SCHEDULES

SHEET
E-2.2

V:\2048\ACTIVE\204819493\CAD-BIM\E22 Aug 15, 2016 2:30 PM By:AMDAVIS
File: E22.dwg Plotted by: kmdavis Date: 15-Aug-16 2:30:43pm